PRODUCT CATALOG

for Design, Commissioning, Maintenance and Service

Products

Diagnosis

Monitoring

Training

Consulting

Specialist in industrial networks since 2002

Networks - Our Passion, Your Business

Read this catalogue to learn everything about our solutions and how they help you to keep your networks reliable and safe. Networks are the lifelines of industrial plants and equipment. However, the fact that a network is running ok does not tell much about its actual state.

Being a cross-industry multisupplier technology provider, we at Indu-Sol have made it our task to objectively evaluate data communication quality and stability. Therefore, we develop and sell planning, commissioning, and maintenance tools for industrial communications networks such as PROFIBUS, PROFINET, or Industrial Ethernet. In this regard we concentrate on Permanent Network Monitoring to ensure uninterrupted production. Beyond that, we are happy to assist you with our expertise and practical solutions in the wireless and EMC fields.

Our products are used for network planning, design, commissioning, and certification as well as for troubleshooting. They provide a more descriptive approach to complex technology and facilitate a better understanding of the matter.

No matter what sector you operate in –
your network is your connection.

Manage networks.
Localize weak points.
Ensure System availability.

6 good reasons for choosing Indu-Sol

- **Holistic concept:** You get a one-stop solution. Whether you are looking for PROFIBUS, PROFINET, Industrial Ethernet, or another industry standard network – we are your partner all along the way from developing a new plant from scratch, or modernising an existing system, to acceptance monitoring, measurement and troubleshooting.
- **Expertise:** We have gained our expertise from long-term experience. We are a certified PROFIBUS and PROFINET International (PI) Training and Competence Centre and we share our expertise through hands-on training courses – we can even hold courses at your facilities if you wish us to do so.
- **On-site know-how**: Having our own in-house development department with more than 20 employees at our Schmölln HQ, we are in a position to provide innovative products and to promptly react to customer requirements.
- **Independence:** Our multisupplier solutions are used in a variety of industries using automation – such as automotive, paper, steel, food and beverages.
- **Global Player:** At Indu-Sol, we are continuously expanding our network of global partners. This means that we are able to provide local customer service worldwide. Products and services are available all around the globe.
- **Personal and direct support:** Our staff are happy to assist you with any queries or concerns you might have. Just call +49 (0)34491-5818-0 and describe your problem.

Diagnostic and service tools

PROFIBUS DP/PA **4**

Quality tester PB-Q^ONE 4
Cable tester PROFtest II XL 5
PROFIBUS-INspektor® NT 6
PROFIBUS Diagnostic Set 7
INBLOX Modular INspektor® 8
Fieldbus-Diagnostic-Handheld FDH–1 10
Universal tester PAtest 11

Ethernet/PROFINET **12**

Topology software PROscan® Active V2 12
PROFINET-INspektor® NT 13
Cable tester ETHERtest V5.1 14
Cable tester ETHERtest V5.2 15
Cable tester PROlinetest 16
PROFINET Diagnostic Set 17
Measuring point PNMA II 18

ASi **19**

Quality Tester ASi View 19
Decentralized data logger ASi-INspektor® 20
ASi Diagnostic Set 21

CAN/DeviceNet/SafetyBUSp **22**

Quality tester CANBUSview XL III 22

EMV **23**

Leakage current clamp EmCheck® LSMZ I 23
Mesh resistance measuring clamp EmCheck® MWMZ II 24
Measuring Clamp Set EmCheck® 25
Intelligent current measuring clamp EmCheck® ISMZ I 26
EMV-INspektor® V2 27

Accessories **28**

Special-purpose measuring and programming adapter 28
PROFtest II XL measuring adapter/connecting cable 29
Mobile power supply unit MoSt II 30
Stripping tools
(Fast Connect Stripping Tool, EmFlex Strippingtool) 31
Topology plan software TOPOCAD 32

Permanent network monitoring

PROFIBUS DP/PA **34**

PROFIBUS-INspektor® NT 34
INBLOX® Modular INspektor® 35
INBLOX® Ethernet head module 36
INBLOX® DP Diag+ Rep 37
INBLOX® DP Diag Master 38
INBLOX® DP PA Diag+ 39
INBLOX® alarm module 40

Ethernet/PROFINET **41**

PROFINET-INspektor® NT 41

ASi **42**

Decentralized data Logger ASi-INspektor® 42

EMV **43**

EMV-INspektor® V2 43

Network management software PROmanage® NT **44**

Configuration example PNM **45**

OPC Server – Field bus warning in the control system **46**

Infrastructure components PROFIBUS DP/PA

Measuring points **49**

Active measuring point PBMA IP20 49
Intelligent measuring point iPBMA IP20 50
Active measuring point PBMB IP20 51
Active measuring point PAMA IP20 52
Active measuring point PBMX IP67 53
Active measuring point PBMS IP64 54
Retrofit Kit PBMF PB Interface electronics 55
Measuring point PAMA IP67 56

Active cables **57**

Active programming cable APKA 57
Active programming Cable APKA II 58
Active stub line ASTL 59

Connector **60**

Connector overview 60
Diagnostic connector PG/90° screw terminal 61
Connector PG/90° screw terminal 62
Connector PG/35° screw terminal 63
SConnector axial screw terminal 64
Diagnostic connector PG/90° Fast Connect 65
Diagnostic connector PG/45° Fast Connect 66
Diagnostic connector axial Fast Connect 67
Connector PG/90° Fast Connect 68
PB connector with PG 90° standard 69
M12 circular connector FC Plug PRO self-made up (B-coded) 70
M12 terminator socket (B coded) 71

Repeater **72**

Built-in repeater DLP30 72
INBLOX® Modular Diagnosis Repeater 73
INBLOX® DP Basic Rep 74
INBLOX® Ethernet head module 75
INBLOX® DP Diag+ Rep 76
INBLOX® Extension Module Diag Rep X1 77
INBLOX® Extension module Diag Rep X2 78
INBLOX® Extension module Diag Rep X4 79
INBLOX® Alarm module 80
MULTIrep family - The compact multiple repeater 81
Compact repeater REpeato 82
Repeater IP67 MR (rough conditions) 83

BLUambas® PROFIBUS **84**

Cables and accessories **85**

PROFIBUS cable solid 85
PROFIBUS cable flexible 86
PROFIBUS cable drag chain capable 87
PROFIBUS cable +FE solid 88
PROFIBUS cable +FE flexible 89
M12 Bus termination (B coded) IP67 90
Control cabinet bushing M12 (B coded) 91
T piece M12 92
T piece M12 compact 93
T piece M12 (PROFIBUS PA) 94
Active stub line "ASTL" MIYATCHI 95

Infrastructure components Ethernet/PROFINET

Measuring points **98**

Measuring point PNMA II 98
Measuring point iPNMA 99

Switches **100**

PROFINET Switch PROmesh P9 100

BLUambas® PROFINET **101**

Cable and accessories **102**

PROFINET cable Cat 5, Typ A, solid 102
PROFINET cable Cat 5, Typ B, flexible 103
PROFINET cable Cat 5, Typ C, drag chain capable 104
PROFINET cable Cat 5, Typ A, solid +FE 105
PROFINET cable Cat 5, Typ B, flexible +FE 106
Control cabinet bushing SSD EMC 107
Control cabinet bushing SSD 108

Connector **109**

Connector RJ45 Fast Connect Plug 180°/90° 109
RJ45/8A Cat 6A Plug, configurable 110
Round plug connector IE Fast Connect Plug PRO M12 111

Infrastructure components ASi

Measuring points **114**

Active measuring point ASiMA HS IP67 114
Active measuring point ASiMA IP67 115

Power pack **116**

ASi power pack 4A/4Ae/8A 116

Insulation monitor **117**

ASi insulation monitor 117

Repeater **118**

ASi Repeater IP20 118
ASi tuner incl. bus termination 119

Bus termination **120**

ASi plug 120

Cable **121**

ASi bus cable 121
ASi power cable 122

Infrastructure components CAN/DeviceNet/SafetyBUS p

Measuring points **124**

Active measuring point CBMA IP67 124
Active measuring point DNMA IP68 125

Connector **126**

Circular connector M12 (A coded) 126
Connector PG/90° Screw terminal for CAN 127
Connector Screw terminal axial 128
Connector 90° Screw term with or without PG 129
Connector PG/90° Fast Connect 130

Repeater **131**

CANbridge X2 131

Cable **132**

CAN bus line 132

Quality tester PB-Q^{ONE}

Function

The **PB-Q^{ONE}** is the tool for the detection of the physical and logical communication quality of the data transfer in PROFIBUS networks. With the provided adapter a widely non-reactive connection to the PROFIBUS network is allowed. In this way, the analysis of the communication quality is possible online - during operation of the plant. Through special software all measurement and test results can be displayed and recorded on a computer. The software is easy to use and clearly arranged. A simple menu structure allows to switch between diagnostics and expert modus.

Physical quality analysis

Signal quality

PROFIBUS is based on voltage difference signal which transfers the logical telegram content to the wires A and B. The level of the voltage difference as well as the shape of these signals are indicators of the physical transmission quality respectively the signal quality. Every Bit is scanned 16-times. The evaluation is based on 8/16 of the overall width. Therefore, the signal transition and the transient effect are excluded from the evaluation. As a result a bar chart diagram with a quality value for each analysed device in the network is displayed.

Signal/noise ratio

The signal-to-noise ratio describes the smallest distance between a logical "0" and a logical "1". It indicates to which extend the signal of a device is influenced by external disturbances or signal fluctuation. On the basis of the signal-to-noise ratio sporadic occurring physical failures can be detected.

Logical quality analysis

Device details

In the illustration of the device details all bus devices are displayed in a hierarchic structure including address and detailed diagnosis information. The colouring of the individual devices (green, yellow, red) allows to immediately evaluate the state of each device. Additionally, to the colour-highlighting the results are shown in clear text with a time stamp.

Telegram mode

Further analysis possibilities are available in the telegram mode. Through a number of filter and trigger options the data traffic can be evaluated based on events or defined data content.

Master simulator

An integrated master simulator allows the detection of the real wired bus topology as well as the analysis of the signal quality of the connected bus devices. The master simulator has to be used in the offline-mode without SPS.

Technical data

- PROFIBUS port: 9 pole D-SUB connector
- USB: USB 2.0 port
- Transmission rate: 9,6 kBit/s to 12 MBit/s
- Power supply: 500mA via USB
- Dimension (H x W x D): 60 x 117 x 35 mm
- Type of Protection: IP20
- Operating temperature: 0 °C to +50 °C
- Storage temperature: -20 °C to +70 °C
- Conformity: CE

PB-Q^{ONE}

Quality values

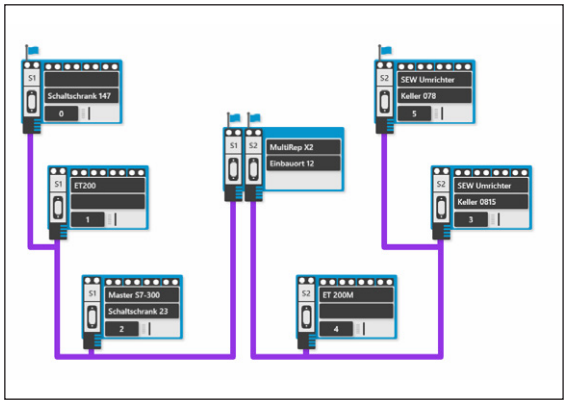

Topology

Ordering details	Art. No..
PB-Q^{ONE}	110010050
Zubehör	
M12 Y-Messadapter	110020018
Adapterset M12	110020015

Cable tester PROFtest II XL

Function

PROFtest II XL is a handy and easy-to-handle tool for checking the correct cabling in PROFIBUS networks with RS-485 transmission technique. By using PROFtest II, you will have a quick and simple overview on the actual wiring state either when starting up the system or carrying out a maintenance job. Measurements are normally performed off-line, i.e. without using the PLC/PROFIBUS master. So PROFtest II is looped through either at the start ot the end of the line (see fig.2). This step is easy to handle and menu driven. To operate PROFtest II, you need not require any special expertise. The most frequently used menu point is the sheer line test. The measurement is carried out in three steps as follows:

- Test without a termination
- Test with one termination
- Test with two terminations

The error is directly displayed with the line length pinpointed in meters measured from the measuring position. The detected data is represented in a measuring record which can be stored in the device or read out by a PC terminal program (see fig. 3). When using PROFtest II XXL version, a master function has been integrated, where as PROFtest II XXL-Online features an additional XXL-online function.

Technical data

- Applicable for PROFIBUS using RS-485 transmission technique
- Baud rate: 9,6 kbps to 12 Mbps
- Power supply according to either supplied accumulators or power pack
- Dimensions (L x W x H): 230 x 98 x 53 mm

Measuring results - Fault messages

- Display of actually laid line length
- Baud rate scan
- Line impedance measurement
- Correct termination
- Line interruption
- Shield interruption
- Mixed-up lines A-B
- Short circuit line A-B
- Short of line A/B - shield
- Using wrong line types
- Determining reflections
- Non-admissible spur line lengths
- List of all devices accessible at bus
- Transmission/Receiving level

Analysis result for test without termination
No error !

Irregulary A <-> B not determinable
Irregulary A <-> shield not determinable
Irregulary B <-> shield not determinable
Breakout or inpedance change not determinable
Cable break not determinable
Cable OK
Impedance approx. 145 ohm
Cable length approx. 159 m

Scope of delivery

- Plastic transport case
- PROFtest II XL
- Adapter for mains operation plus two rechargeable batteries
- Serval adaptors for PROFIBUS connection
- PROFtest II XL Manual

Ordering details	Art. No.
PROFtest II XL – Basic device	110010005
Extension DP master function	110010007
Extension online function	110010008
Extension DP master and online function	110010006

PROFIBUS-INspektor® NT

Function

The **PROFIBUS-INspektor® NT** monitors the logical data traffic as a passive data collector and gives alarm when first abnormalities are detected – not just when the plant already broke down. Quality-related events, such as:

- Repeat telegrams
- Error telegrams
- Device diagnostics
- Device failures and restarts
- Bus cycle time
- Bus speed

are analyzed, stored and evaluated for each device. The PB-INspektor® NT can be used as a temporary measuring tool, e.g. for commissioning and service or for permanent network monitoring. The contact between the PROFIBUS-INspektor® NT and the bus is rendered through an active programming cable APKA II (Art. No.: 110040001) or the INspektor® can be directly connected like a PROFIBUS node.

As soon as a threshold value is exceeded the INspektor® gives an alarm and warns timely for aimed maintenance measures that are plannable now. An alarm list in the INspektor® provides detailed information about the error time, the device where the error occurred and the event (exceeded threshold value). The large memory space enables storing up to 2,000 alarms. Each alarm has a snapshot of 500 telegrams.

Your PROFIBUS topology is shown directly according to the INspektors® web interface. A plain overview of your network is provided showing immediately the current condition of all PROFIBUS nodes.

Technical data

• Voltage supply:	+24 VDC ±10 %, 0,2 A
• PROFIBUS	
- Protocols:	DP, DPV1, DPV2, FMS, MPI
- Connection:	9-pol. Sub-D
- Baud rate:	9,6 kBit/s bis 12 MBit/s
• Ethernet	
- Baud rate:	10 / 1000 MBit/s
- Connection:	RJ45

General data

• Installation:	35 mm DIN rail
• Dimensions (H x W x D):	105 x 54 x 124 mm
• Protective system:	IP20
• Operating temperature:	+5 °C bis +55 °C

Alerting options

- Email alert
- Floating contact
- LED display
- SNMP trap

Scope of delivery StarterKIT

- PROFIBUS-INspektor® NT
- Active programming cable APKA II
- Patch Cable
- Wall war
- Case
-

PROFIBUS-INspektor® NT

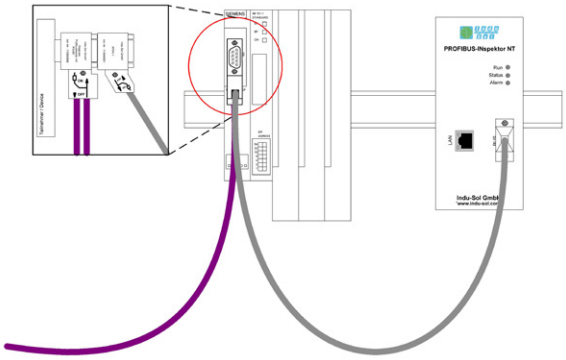

Connection according to APKA II

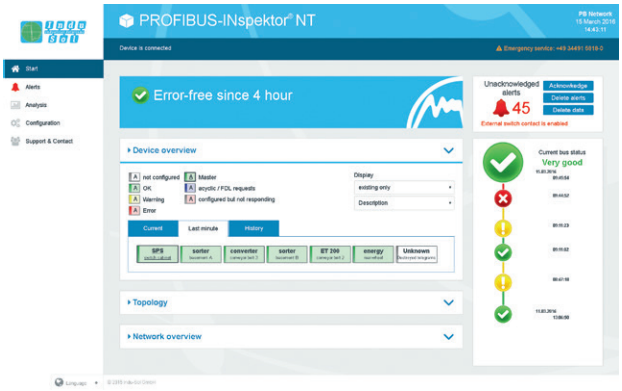

Web interface

Ordering details	Art. No.
PROFIBUS-INspektor® NT	124010020
PROFIBUS-INspektor® NT StarterKIT	124010021

PROFIBUS Diagnostic Set

PROFIBUS Diagnosekoffer II

- PB-Q^{ONE}
- PROFtest II XL
- Leakage current clamp EMCheck® LSMZ I
- Patch cable
- Power pack
- Case

Ordering details	Art. No.
PROFIBUS Diagnostic Set II	110010031

PROFIBUS Diagnosekoffer III

- PROFIBUS-INspektor®NT
- PB-Q^{ONE}
- PROFtest II XL
- Leakage current clamp EMCheck® LSMZ I
- APKA II –active programming cable II
- Patch cable
- Power pack
- Case

Ordering details	Art. No.
PROFIBUS Diagnostic Set III	110010032

PROFIBUS Diagnostic Set III

Instruction in the devices and further diagnostic Sets on request

INBLOX® Modular INspektor®

Function

The **Modular INspektor®** of the INBLOX® series is a passive data collector analysing and evaluating logic and physical parameters both in PROFIBUS DP and PROFIBUS PA. Depending on the configuration it is also possible to evaluate a PROFIBUS master by which parameterization can be done according to FDT/DTM. You have thus a means to monitor the field bus and the field devices in one single application.
Events that can be evaluated in the analysis are

- quality characteristics through bar chart
- error telegrams
- repeat telegrams
- diagnostic messages of individual devices
- device failures
- oscilloscope function – assessment of bit form.

An integrated web server displays the network condition on every PC in form of a device-related matrix. It is also possible to store telegram recordings of events on a memory card and display the same separately.

The Modular INspektor® consists of a head module used for connection to the existing Ethernet. It can be extended by up to five modules. By combining diagnosis and parameterization saves cost and time for commissioning and maintenance.

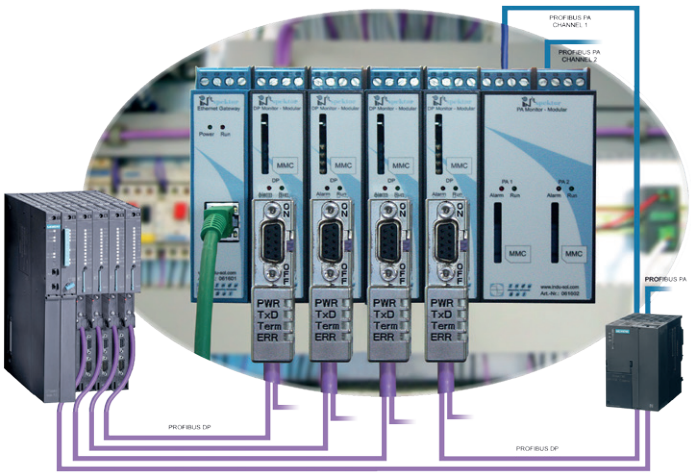

Ordering details	Art. No.
Ethernet head module (E head)	124060000
Extension DP Diag+ Rep	124060010
Extension PA Diag+	124060001
Extension DP Diag Master	124060003
Extension DP Diag Rep X1	124060013
Extension DP Diag Rep X2	124060012
Extension DP Diag Rep X4	124060009
Extension alarm module	124060006

Modular INspektor® with head module and extension modules

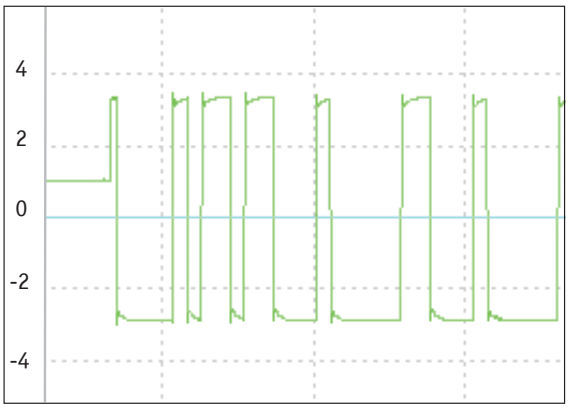

Oscilloscope function

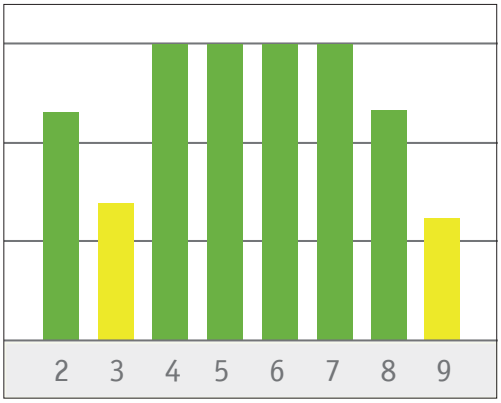

Transmission performance

INBLOX® Modular INspektor®

Function/Technical data

E head module

The **Ethernet head module** of the Modular INspektor® is used for connection to the existing Ethernet. It is thus possible to access up to five extension modules (PROFIBUS DP, PROFIBUS PA, FDT/DTM) at the same time ander one IP address.

- Connection: RJ-45 (Ethernet)
- Baud rate: 10 MBit/s / 100 MBit/s
- Voltage supply: ±24 VDC ±20%
- Installation: 35 mm DIN top-hat rail
- Dimensions (H x W x D): 114,5 x 22,5 x 110 mm
- Protective system: IP20

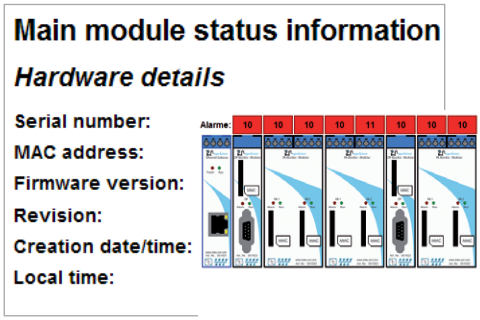

Extension DP Diag+ Rep

The **DP Diag+ Rep modul** is a decentralized PROFIBUS measurement tool with repeaterfunction developed for the temporary and permanent monitoring of the logic and physical data traffic. All major events are recognized, evaluated, buffered and displayed for every DP strand according to a web interface. Every event is stored as a telegram and oscilloscope snapshot.

- Connection: RS-485 socket
- Baud rate: 9,6 kBit/s to 12 MBit/s
- Voltage supply: according to backplane bus
- Protocols: DP, DPV1, FMS, MPI
- Installation: 35 mm DIN top-hat rail
- Dimensions (H x W x D): 114,5 x 22,5 x 110 mm
- Protective system: IP20

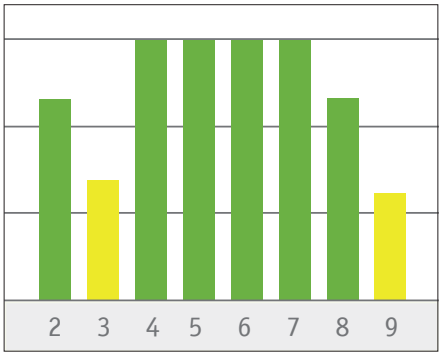

Extension PA Diag+

The **PA Diag+ modul** module can monitor, analyse and display the results of 2 PA segments in parallel. The PROFIBUS PA analyses and evaluates logic parameters as does the PROFIBUS DP. Parameters included are error telegrams and repeat telegrams but also diagnostic messages by the individual devices and device failures.

- Connection: 2 screw terminals
- Baud rate: 31,25 kBit/s
- Voltage supply: according to backplane bus
- Protocols: PROFIBUS PA
- Installation: 35 mm DIN top-hat rail
- Dimensions (H x W x D): 114,5 x 22,5 x 110 mm
- Protective system: IP20

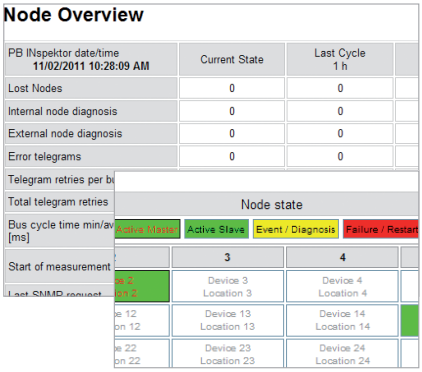

Extension DP Diag Master

The **DP Diag Master module** enables the PROFIBUS DP to do FDT/DTM parameterization parallel to all analyses. It only needs a frame application, such as PACTware by which it is possible to parameterize and configure devices and modules as master class 2 according to Ethernet. The logic diagnosis can be retrieved according to the web interface of the E-head. By this module it is possible to combine parameterization and logic monitoring in one module.

- Connection: RS-485 socket
- Baus rate: 9,6 kBit/s bis 12 MBit/s
- Voltage supply: according to head module
- Protocols: DP, DPV1
- Installation: 35 mm DIN top-hat rail
- Dimensions (H x W x D): 114,5 x 22,5 x 110 mm
- Protective system: IP20

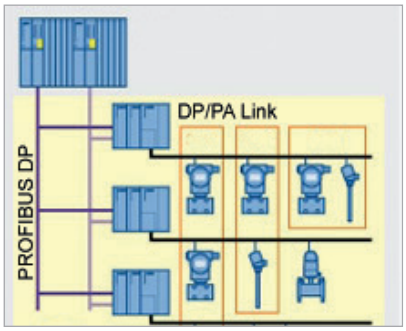

Fieldbus Diagnostic Handheld FDH-1

Function

The **Fieldbus Diagnostic Handheld FDH–1** is a comprehensive measurement and commissioning tool for PROFIBUS PA and FOUNDATION Fieldbus H1. The handheld can be connected to any point of a segment. Via display and push buttons, the device guides the user through many scenarios of testing. The handheld can record and store data for up to 32 segments with maximum device count without requiring a connection to a PC.
The handheld supports inexperienced and expert users alike through different operating modes. Failure margin checks and device coupler tests help set up the optimum condition of the fieldbus infrastructure and find weak spots in the installation. The expert system and wizards enable easy handling and require little or no training.
FDH–1 Manager Software Premium can operate the handheld with enhanced visualization. The software loads data from FDH–1 and saves data back, to allow for comparisons between actual and planned physical layer attributes.

Measuring results - Fault alarms

- Ground faults and unbalance
- Signal level
- Jitter
- Signal polarity
- Noise
- Communication error statistics

Approvals

- Conformance statement: TÜV 05 ATEX 2923 X
- Type of protection, temperature class: ¬ II 3G EEx nA [nL] IIC T4
- Guideline conformity: RL 94/9 - EG IEC 60079-15

Technical data

- Rated voltage: 8,5 to 35 V
- Rated current: Up to 10 mA, if bus powered
- Electromagnetic compatibility: NE 21
- Protective system: IEC 60529
- Shock/Vibration resistance: EN 60068-2-27 / 60068-2-6
- Ambient temperature: -20°C to 50°C
- Storage temperature: -40°C to 70°C
- Relative air humidity: < 95 % non-condensing
- Shock resistance: 15 g, 11 ms
- Vibration resistance: 1 g, 10 to 150 Hz
- Dimensions (H x W x D): 138,3 x 197 x 40,7 mm

Scope of delivery

- Fieldbus Diagnostic Handheld FDH–1 incl. Transport case
- Measuring adapter with 3 pin test plugs
- Measuring adapter with 3 test clips
- USB cable
- Software and Manual

Fieldbus Diagnostic Handheld FDH-1

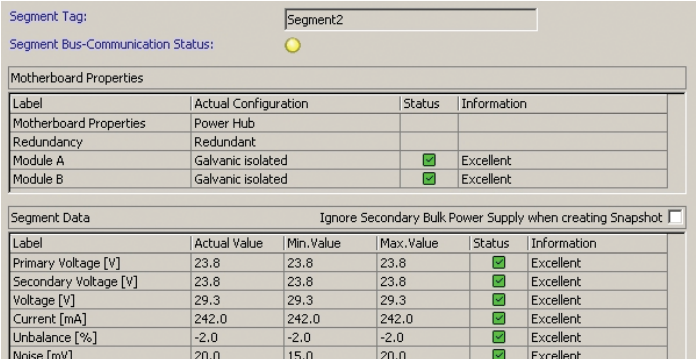

Segment Tag: Segment2
Segment Bus-Communication Status:

Motherboard Properties

Label	Actual Configuration	Status	Information
Motherboard Properties	Power Hub		
Redundancy	Redundant		
Module A	Galvanic isolated	✓	Excellent
Module B	Galvanic isolated	✓	Excellent

Segment Data — Ignore Secondary Bulk Power Supply when creating Snapshot ☐

Label	Actual Value	Min. Value	Max. Value	Status	Information
Primary Voltage [V]	23.8	23.8	23.8	✓	Excellent
Secondary Voltage [V]	23.8	23.8	23.8	✓	Excellent
Voltage [V]	29.3	29.3	29.3	✓	Excellent
Current [mA]	242.0	242.0	242.0	✓	Excellent
Unbalance [%]	-2.0	-2.0	-2.0	✓	Excellent
Noise [mV]	20.0	15.0	20.0	✓	Excellent

Segment assessment

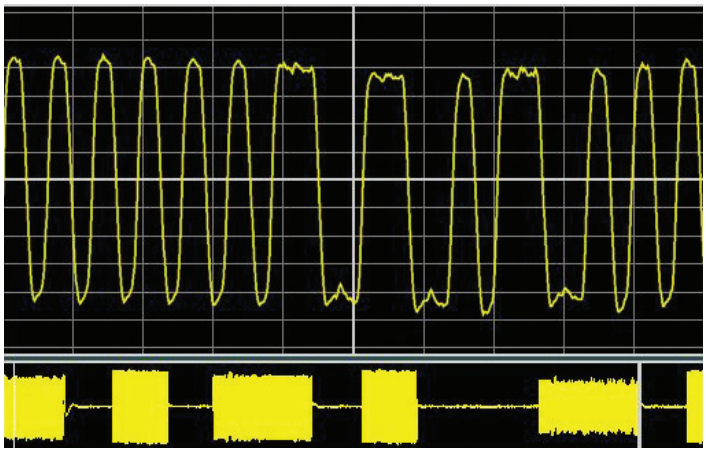

Oscilloscope function

Ordering details	Art. No.
Fieldbus Diagnostic Handheld FDH-1	110010100
FDH-1 Manager Software	110010101

Universal tester PAtest

Function

The Universal tester PAtest is a measuring device used to check the bus physics and the communication of the bus device in the PROFIBUS PA. The measurements are performed while the system is running. Two function keys make use every easy. The display classifies the measuring results either as "OK" or "BAD".
The following parameters are measured:

- The number of devices in the segment concerned
- Live-list display
- Log-on and log-out of devices
- Error and repeat telegrams
- Display of segment voltage
- Display of signal level of all devices
- Short-circuit detection between signal cores and cable shield
- Measurement of noise level average and peak

The test records of eight segments can be stored internally on the device and later transmitted to the PC according to a USB interface. They can then be analysed by Microsoft® Excel.

Bus connection

The device is supplied directly according to the PROFIBUS PA and so it needs neither a battery nor an external power supply. This makes the PAtest suitable for use in explosion-hazardous zones.

Approvals

- CE / FCC / ATEX Ex ia IIC T4
- FM US and Kanada: Class I, Div 2, ABCD, T4
  Class I, Zone 2, IIC T4
  Class I, Div 1, ABCD, T4
  Class I, Zone 0 und 1, AEx/Ex ia IIC T4

Technical data

- Input voltage: field bus operation: 8 to 32 VDC
  USB operation: 4.1 to 5.5 VDC
- Input current: fieldbus operation: max. 10 mA
  USB operation: max. 30 mA
- Power loss: fieldbus operation: max. 320 mW (at 32 VDC)
  USB operation: max. 165 mW (at 5.5 VDC)
- Temperature range: -20 to +50 °C
- Dimensions (L x W x D): 146 x 88 x 28 mm
- Weight: 378 g
- Direct voltage measuring range: 8 to 32 ± 0.5 VDC
- Signal level measuring range: 0.12 to 2 Vss ±10 %
  ±25 mVss

Operating systems

- Windows 2000, Windows XP, Windows Server 2003, Windows Vista, Windows 7

Scope of delievery

- PAtest incl. MBP and USB interface
- Connecting cable incl. measurement adapters
- USB cable

Ordering details	Art. No.
PAtest	110010001

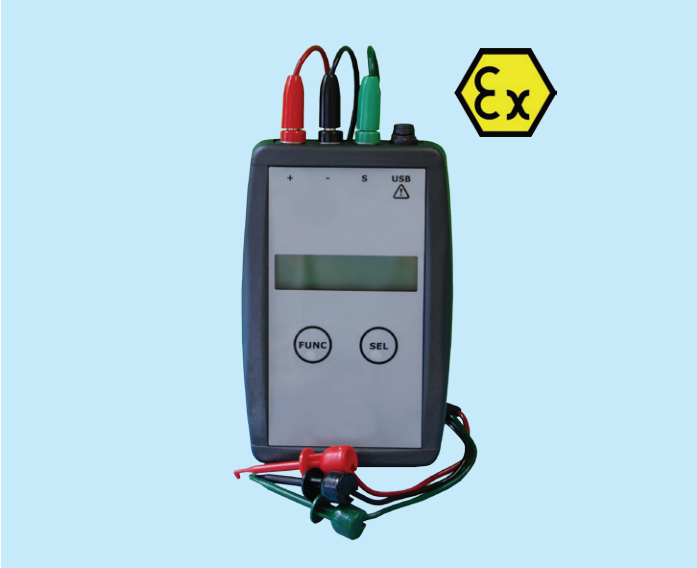

PAtest

Report 1 Segment Report

Segment Measurements	Data	Acceptable Values	OK/BAD
Voltage	31,6V	9,0V Minimum	OK
Lowest Device Signal	1346mV	151mV Minimum	OK
Lowest Device Signal Address	2 (2H)		
Avg Fieldbus Frequency Noise	0mV	74mV Maximum	OK
Peak Fieldbus Frequency Noise	5mV	74mV Maximum	OK
Avg Low Frequency Noise	0mV	149mV Maximum	OK
Peak Low Frequency Noise	25mV	149mV Maximum	OK
Avg High Frequency Noise	0mV	149mV Maximum	OK
Peak High Frequency Noise	15mV	149mV Maximum	OK
Shield Short	No Shorts	No Shorts	OK
Most Recent Add/Drop Address	22 (16H)		
Device Add or Drop	Drop	None Added/Dropped	BAD
Number of Active Devices	2		

Device Measurements	Data	Acceptable Values	OK/BAD
Device Address	2 (2H)		
Signal Level	1392mV	151mV Minimum	OK
Added/Dropped	Not Added/Dropped	Not Added/Dropped	OK
Master or Slave	Master		
Retransmits	0	0	OK
Device Address	21 (15H)		
Signal Level	1458mV	151mV Minimum	OK
Added/Dropped	Added	Not Added/Dropped	WARN
Master or Slave	Slave		
Retransmits	1	0	BAD
Device Address	22 (16H)		
Signal Level	1428mV	151mV Minimum	OK
Added/Dropped	Dropped	Not Added/Dropped	BAD
Master or Slave	Slave		
Retransmits	2	0	BAD

Measurement Summary: 4 Measurements are BAD and 1 WARNING

Report

Topology software PROscan® Active V2

Function

The **PROscan® Active V2** software enables the user at any time to record and display an actual topology plan of a PROFINET/ Ethernet network incl. all important device information. Subsequently this information can be edited and printed in a clear summary. It is also possible to simply save the information as Topo/PDF/CSV data. By using a compare scan all topology changes will be illustrated in traffic light colours. The software also offers an optimised touch panel designed to be used on HMI & Panel PC's.

Due to multiple licenses the user is able to install the software at various machines and can therefore demonstrate multiple network structures. This ensures that the current topology and the current network data can be recorded and displayed at each machine.

PROscan® Active V2 provides the user with following information, which is of high importance for the network maintenance and troubleshooting's:

- Detection of the real network structure (topology)
- Device information
  - PROFINET name
  - IP/MAC address
  - Hardware/Software version
  - Device type/name
  - Order number
- Line information
  - Line length
  - Power budget (POF)
- Port Overview
  - Discards
  - Errors

Highlights

- New diagnostic mode with transparent statistics
- Comparison of hardware/software versions, with a warning if a deviation is found
- Transparent acceptance report as check list ("Fulfilled"/"Not fulfilled"), with own company logo
- Multi-topology: Several topologies can be opened at the same time
- Significantly faster network scan with minimum network load
- Simplified editing::
  - Software helps to correctly arrange devices
  - Port numbers for the created connections are editable
  - All changes can be undone

Interacting with PROFINET-INspektor® NT

PROFINET DiagnoseDUO:

In case that a PROFINET INspektor® NT is located within the network, all determined quality parameters will automatically be assigned to the devices and the corresponding status will be graphically displayed in traffic light colours.

System requirements

- Operating system:
  Microsoft® Windows® Vista, 7, 8, 10
  Microsoft® Windows® Server 2008, 2012, 2016
- Hardware requirements
  Intel Atom 800MHz or more
  1GB RAM or more
  Min. 400MB hard disk space

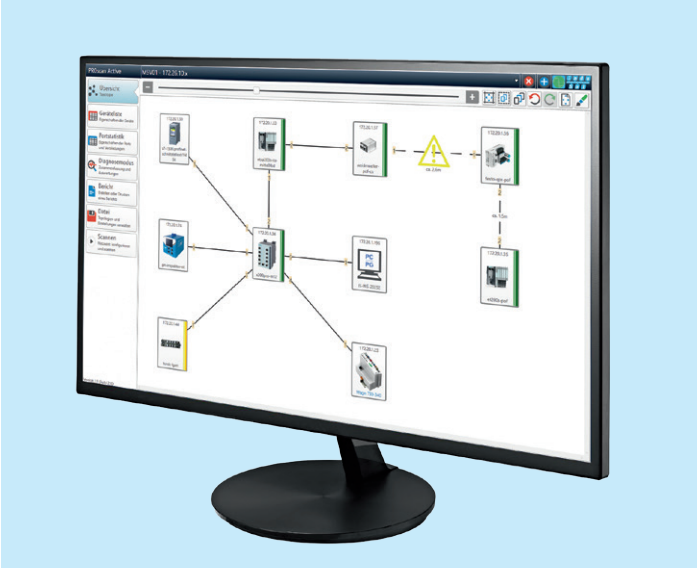

Topology software PROscan® Active V2

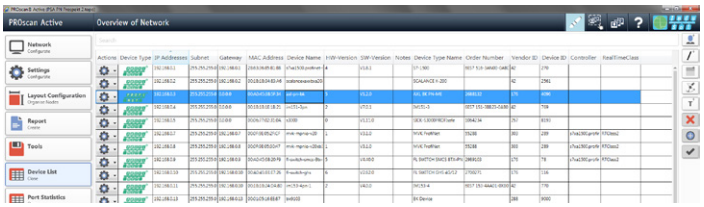

Device list

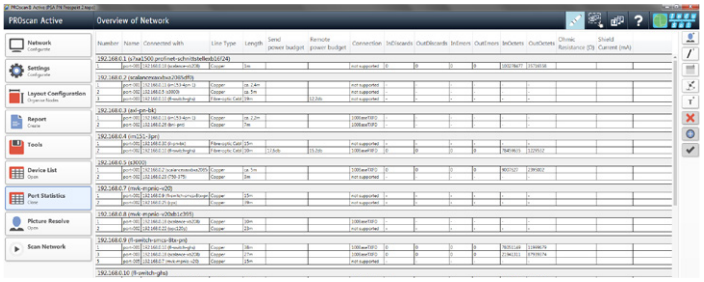

Port Statistic

Device Statistics | Connection Statistics | IP Statistics | Version Statistic

Device Type Name	Order Number	SW Version	HW Version	Device Count
Euchner MGB	116521	V3.24.0	4	5
	116523	V3.24.0	4	2
Festo CPX-Terminal	TN 197330	V3.2.21	22	2
HAHN RPT200	629320	V1.0.0	1	1
IM151-3	6ES7 151-3BA23-0AB0	V7.0.5	8	26
MI3COMMPN	MI3COMMPN	P3.2.24	1	1

Version Statistic

Ordering details	Art. No.
Upgrade from PROscan® Active V1 to V2	**117000052**
PROscan® Active V2 – Basic License	**117000053**
PROscan® Active V2 – 5 Licenses	**117000057**
PROscan® Active V2 – 25 Licenses	**117000061**

Further licences on request!

PROFINET-INspektor® NT

Function

The **PROFINET-INspektor® NT** is a passive data collector that analyzes telegram traffic in PROFINET and Ethernet networks in terms of events like

- Utilization rate,
- Speed,
- Data throughput,
- Telegram jitter,
- Repeat telegrams,
- Error telegrams,
- Device diagnostics and
- Device failures.

This information reflects the current condition of the communication quality in the network concerned and provides the basis for a condition-based maintenance. By storing data in the device events on the bus may also be traced and evaluated later. Due to an integrated web server the network status can be displayed on any PC by internet browser without requiring additional software.

It is recommended to install the PROFInet-INspektor® permanently in the network connection between controller and first IO device or switch, since the majority of communication merges typically in this connection.

Highlights

Display that shows errors directly
Net load displayed with resolution in milliseconds
Alarms when unknown devices appear
Option to carry out active or passive network diagnosis
Uninterrupted monitoring, even at high net load

Technical data

- Voltage supply: +24V DC ±10%
- PROFINET
  - Protocols: RT, CBA
  - Connection: RJ45 (IN / OUT)
  - Baud rate: 10 / 100 Mbps
- Ethernet
  - Baud rate: 10 / 100 Mbps
  - Connection: RJ45
  - MDI/MDIX

General data

- Installation: 35 mm DIN top-hat rail
- Dimensions (H x W x D): 105 x 105 x 124 mm
- Protective system: IP20
- Ambient temperature: +5 °C bis +55 °C

Scope of delivery StarterKIT

- PROFINET-INspektor® NT
- Power pack
- Patch cable
- Case and Manual

PROFINET-INspektor® NT

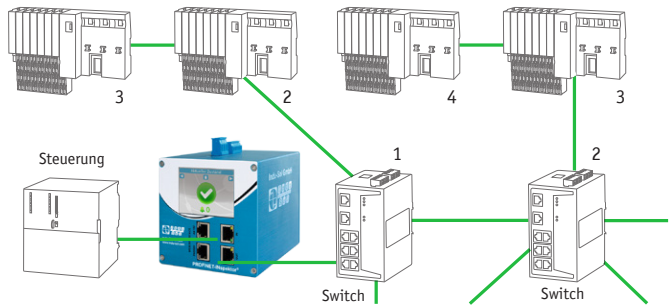

PROFINET-INspektor® NT „Its position in network“

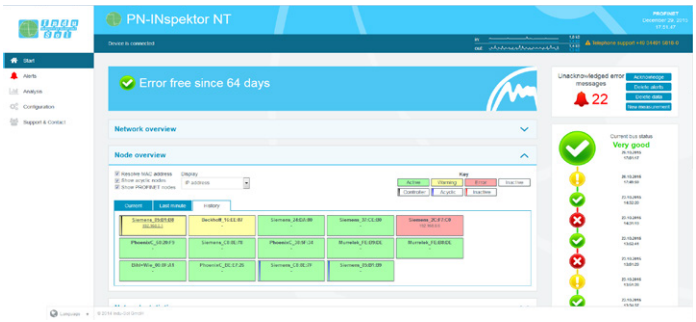

Web interface

Ordering details	Art. No.
PROFINET-INspektor® NT	124030100
PROFINET-INspektor® NT StarterKIT	124030120

Cable tester ETHERtest V5.1

General information

The cable tester **ETHERtest V5.1** is an indispensable measuring device to check, document and certify the network infrastructure for Ethernet, PROFINET, EtherCAT and optionally for fiber optics. It is easy to use and menu-driven (8 languages available).

Function

The ETHERtest V5.1 is capable of evaluating all necessary measurements for the certification and acceptance test of network cables up to class FA/category 6A (1000 MHz). The line length attenuation, crosstalk, resistance, delay, shield and the correct pin assignment are detected and evaluated metrologically. The Cat 5e measurement commonly used in practice is carried out within 9 seconds. In addition to the certification of copper lines it is possible to carry out attenuation and OTDR measurements of multimode and singlemode fiber optic cables by using an additional adapter. All measurement results are displayed graphically, whereby the type and location of errors can be identified exactly to the decimeter. All measurements are stored automatically in an internal memory and can be retrieved in the form of a measurement report by a software program.

Technical data

• Max. test frequency:	1000MHz
• Test standards	
• ISO/IEC 11801:	Class C, D, E and EA
• TIA 568:	Kategorie 3, 4, 5, 5e, 6, 6A
• Measurement range:	150 m
• Resolution:	0,1 m
• Accuracy:	± 0,3 m + 2 %
• Internal memory:	ca. 12000 CAT 6A measurements

General data

• Dimensions (H x W x D):	279,4 x 13,33 x 6,67 mm
• Typ. battery life:	8 h
• Operating temperature:	0°C to +45°C
• Storage temperature:	-20°C to +50°C

Scope of delivery

- Main device
- Remote device
- Carrying case
- 2x RJ45 CAT 6A/Class EA permanent link adapter
- 2x RJ45 CAT 6A/Class EA channel adapter
- Technical manual + software CD

Cable tester ETHERtest V5.1

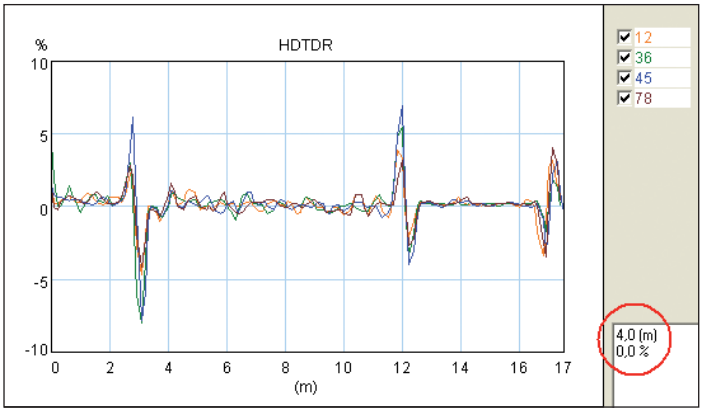

Fault order
This figure shows at which distance one core or a pair gets too high an attenuation

Ordering details	Art. No.
ETHERtest V5.1 (extendable for FOC)	112010011
Accessories	
M12 Adapter set for ETHERtest V5.1	112020015
TERA Class FA Adapter set for ETHERtest V5.1	112020016
GG45 Class FA Adapter set for ETHERtest V5.1	112020017
Attenuation fiber optics adapter set singlemode	112020020
Attenuation fiber optics adapter set multimode	112020021
Attenuation fiber optics adapter set single-/multimode	112020022
OTDR fiber optics adapter singlemode	112020023
OTDR fiber optics adapter multimode	112020024
OTDR fiber optics adapter single-/multimode	112020025

Cable tester ETHERtest V5.2

General information

The cable tester **ETHERtest V5.2** is an indispensable measuring device to check, document and certify the network infrastructure for Ethernet, PROFINET and EtherCAT. It is easy to use and menu-driven (14 languages available).

Function

The ETHERtest V5.2 is capable of evaluating all measurements necessary for the certification and acceptance test of network cables up to class EA/category 6A (500 MHz). The line length attenuation, crosstalk, resistance, delay, shield and the correct pin assignment are detected and evaluated metrologically. The Cat 6 measurement commonly used in practice is carried out within 9 seconds. All measurement results are displayed graphically, whereby the type and location of errors can be identified exactly to the decimeter. All measurements are stored automatically in an internal memory and can be retrieved in the form of a measurement report by a software program.

Technical data

- Max. test frequency: 500MHz
- Test standards
  - ISO/IEC 11801: Class C, D, E and EA
  - TIA 568: Kategorie 3, 4, 5, 5e, 6, 6A
- Measurement range: 150 m
- Resolution: 0,1 m
- Accuracy: ± 0,3 m + 2 %
- Internal memory: ca. 12000 CAT 6A measurements

General data

- Dimensions (H x W x D): 279,4 x 13,33 x 6,67 mm
- Typ. battery life: 8 h
- Operating temperature: 0°C to +45°C
- Storage temperature: -30°C to +60°C

Scope of delivery

- Main unit
- Remote unit
- Carrying case
- 2x RJ45 CAT 6A/Class EA-Channel adapter
- Manual + software (CD)

Cable tester ETHERtest V5.2

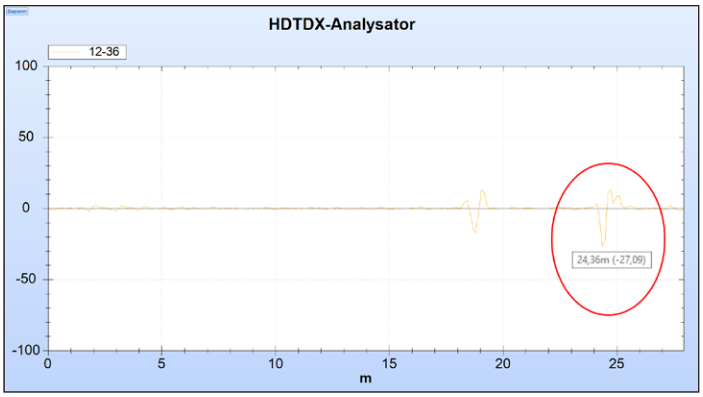

Fault order
This figure shows at which distance one core or a pair gets too high an attenuation

Ordering details	Art. No.
ETHERtest V5.2	**112010020**
Accessories	
M12 Adapterset für ETHERtest V5.2	**112020015**

Cable tester PROlinetest

Function

The **PROlinetest** is an indispensable tool for installation and trouble-shooting in PROFINET and Industrial Ethernet. It detects installation mistakes and it checks wires and wire pairs for continuity, interruptions, short circuit, mixing-up and exceeding of line length. By measuring the total length of the cable and the distance to the error the line tester facilitates a troubleshooting enormously. The big graphical display and the intuitive menu guidance allow a simple handling.

Due to the configurable cable database unknown cables and wiring diagrams are a thing of the past. The usual cable assignments for PROFINET, T-568A and T-568B are already available. The tool checks all connected devices for availability of Power over Ethernet (PoE) and which power level is supported.

A certification of the cable connections according to Class or CAT and a storing of the measurement results are not provided by the PROlinetest.

Technical data

- Overvoltage protection: Up to 100 V
- Storage temperature: -25 to +75 °C
  90 % relative humidity, non-condensing
- Operating temperature: -5 to +50 °C
  90 % relative humidity, non-condensing

Main Unit
- Housing: Solid, impact-resistant and weather-resistant ABS housing
- Weight: 380 g excl. battery
- Dimensions (H x W x D): 195 x 100/78 x 45 mm
- Batteries: 4x 1,5 V Alkaline battery
- Battery lifetime: Approx. 40 hours

Remote Unit
- Housing: Solid, impact-resistant and weather-resistant ABS housing
- Weight: 30 g
- Dimensions (H x W x D): 61 x 41 x 26 mm

Range of functions

- Detection of all wiring mistakes
- Integrated cable database with predefined PROFINET wiring profiles
- Graphical display with backlight
- Measurement of cable lengths (TDR time domain reflectometer) up to 150 m
- Distance to error (interruptions / short circuits)
- Power over Ethernet load test (IEEE802.3af)

Scope of delivery

- PROlinetest
- PROlinetest Remote Unit
- Tool bag
- Adapter set RJ45 plug on a M12 socket for PROFINET
- Several testing cables with RJ45 plug, 2x banana plug 4 mm with crocodile clips, 2 m length
- Plug-in adapter RJ45/BNC
- User manual in German / English

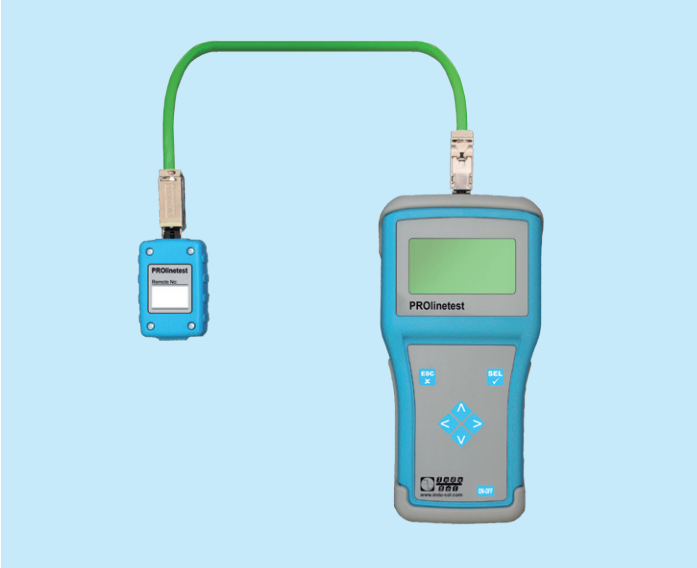

Cable tester PROlinetest

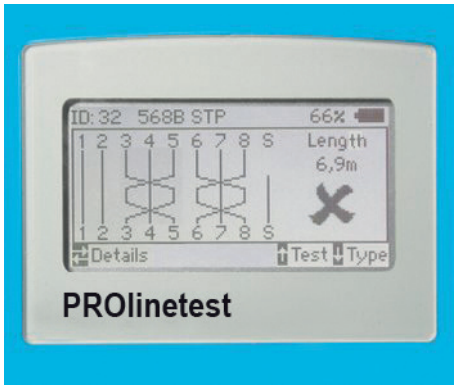

Example of error diagnosis

Adapter set with RJ45 plug on M12 socket for PROFINET

Ordering details	Art. No.
PROlinetest	112010010
Accessories	
DRIVE-CLLIQ measuring adapter	112020030

PROFINET Diagnostic Set

PROFINET Diagnostic Set with PROlinetest

- PROFINET-INspektor® NT
- PROmanage® NT
- PROscan® Active V2
- PROlinetest
- Leakage current clamp EMCheck® LSMZ I
- Power pack
- 2x Patch cable
- Incl. case

Ordering details	Art. No.
PROFINET Diagnostic Set with PROlinetest	114010020

PROFINET Diagnostic Set with ETHERtest

- PROFINET-INspektor® NT
- PROmanage® NT
- PROscan® Active
- ETHERtest V5.1/5.2
- Leakage current clamp EMCheck® LSMZ I
- Power pack
- 2x Patch cable
- USB gigabit network card adapter
- Incl. case

Ordering details	Art. No.
PROFINET Diagnostic Set with ETHERtest V5.1	114010040
PROFINET Diagnostic Set with ETHERtest V5.2	114010050

PROFINET Diagnostic Set with PROlinetest

Instruction in the devices and further diagnostic Sets on request!

Measuring point PNMA II

Function

The **PROFINET measuring adapter II** (PNMA II) serves as an access point for feedback-free telegram recording in PROFINET networks and further ethernet-based networks under production conditions. A permanent installation of the measuring adapter in the network connection between the automation device (SPC) and the first switch is recommended, because typically the greater part of the communication converges in this connection. Therefore two network sockets (network P1 and P2) are available at the unit.
To connect an analysis tool non-reactively (PN-INspektor® or laptop) two monitor sockets are provided (monitor M1 and M2). Thus it is possible to monitor in parallel both communication directions. An analysis tool is connected to the monitor sockets by two network lines. To analyse and evaluate the measuring results, the telegrams from both communication directions can be superimposed in terms of time. Error telegrams are not rejected by the PNMA II but forwarded.

Comparison: Telegram record during online mode

Recording by port mirroring at the switch

Advantages:
- No additional hardware required (no PNMA II)

Disadvantages:
- Time-consuming set-up of the mirror port at the switch
- High load of the switch by the mirror port
- Package losses at high data rates
- Bidirectional mirror port urgently required
- Defective telegrams are not mirrored

Recording by PNMA II

Advantages:
- No vacant switch port required
- No efforts on connecting a measuring tool
- Unconditionally bidirectional up to 100 Mbps

Disadvantages:
- Additional hardware

Technical data

• Installation:	35 mm DIN top-hat rail
• Dimensions (H x W x D):	105 x 38,9 x 75 mm
• Weight:	420 g
• Voltage input:	24 VDC (20-28 V, reverse polarity protected)
• Output voltage:	24 VDC (max. 1A)
• Protective system:	IP20
• Connector:	RJ45
• Delay time:	Less than 1 Bps at 100 Mbps
• Cable:	Cat 5 / Cat 5E, max. 100 m
• Operating temperature:	0 °C to +50 °C
• Storage temperature:	-15 °C to +75 °C
• Air humidity:	10 to 90 %, non-condensing

Information to connecting

To connect the PROFINET-INspektor® via PNMA II two patch cables are required (crossover cable is not needed). In case of a power supply failure of the PNMA II the PROFINET communication via the PNMA II remains constant. For power supply of additional analysing tools the port UOUT (24VDC) is provided for.

Safety information: Indu-Sol recommends to integrate an adequate protection concept for the reliable operation of the PNMA. It is only allowed to operate the PNMA in accordance with an extra-low voltage power supply for safety (acc. to IEC/EN 60950-1/VDE 0805-1).
Please don't operate the device with alternating voltage or direct voltage more than 40V DC.

Measuring point PNMA II

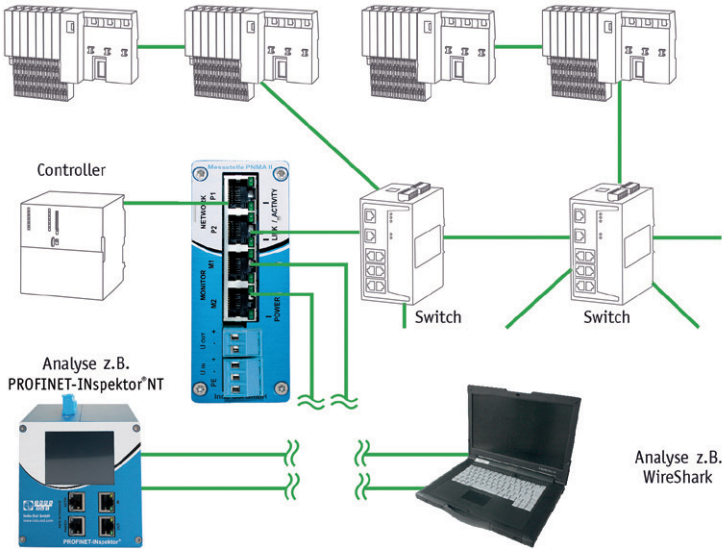

Example of topology - temporary telegram analysis

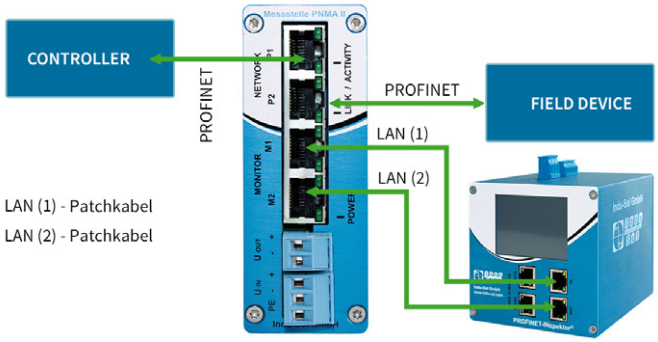

Example of connection

Ordering details	Art. No.
Measuring point PNMA II	114090100

Qualitätstester ASi View

Function

The ASi view is a tool for determining the physical and logic communication
quality of the data exchange in ASi networks. The measurement is performed online while the system is running.
The measuring and test results are displayed through a software on your PC. An USB interface is used for the connection to the PC.

Automatic mode

The Automatic mode measures the communication parameters and gives general assessment of the quality at site. All that is needed is to connect the adapter cable to the network to be tested and connect a laptop according to an USB cable, start the control program and store the data after a certain collection time. If problems are signalled, the information issued by the program in plain text should be followed. No special knowledge of AS interface is required for the automatic mode.

Expert mode

The „Expert“ mode as a second mode is designed for a detailed analysis of any problem that may arise in the AS-interface network. This mode requires specific knowledge of the AS-interface and the communication principles applied. It may be used both at site by qualified service personnel
and at the lab by product developers and enables an in-depth analysis of the communication events in the network.

Technical data

- DC voltage supply according to USB interface from the PC
- Max. Power: 420 mA
- Voltage: max. 40 Vss
- Frequency: AS-Interface frequency spectrum
- Sampling rate: 2,5MHz
- Measuring time for a Data block: 50ms

Ambient conditions

- Protective system: IP20
- Temperature range: 0 to 45 °C
- Relative humidity: max. 80%, non-condensing

Scope of delivery

- ASi View
- ASiMA (ASi measuring Adapter M12)
- Oszi M12 adapter
- USB cable (2 m)
- CD containing software and user manual

Ordering details	Art. No.
ASi View	120010001
ASi Diagnostic Set	120010002

ASi View

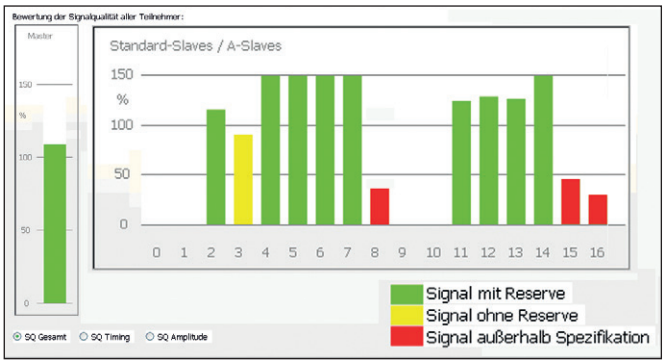

Evaluation of the signal quality for all devices

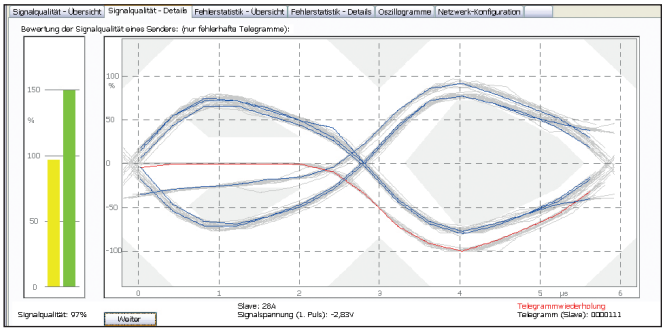

Evaluation of the signal quality for one device „eye pattern“

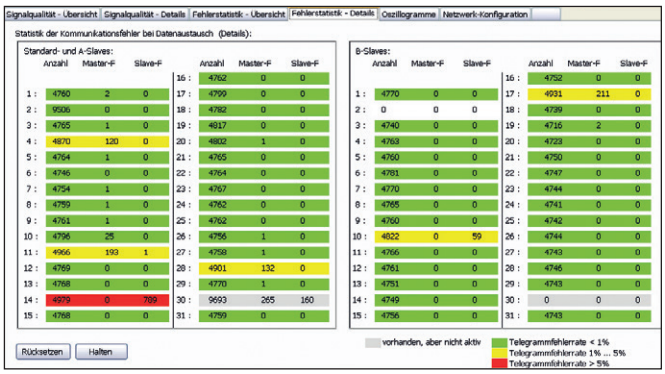

Telegram analysis including error statistics per device

Decentralized data logger ASi-INspektor®

Function

The **ASi-INspektor®** is a passive data logger that analyses the telegram traffic of ASi networks for events, such as

- error telegrams,
- repeat telegrams,
- package error
- device diagnosis and
- device failures.

This information reflects the current status of the communication quality in ASi networks. All collected network data can be retrieved according to Ethernet using an integrated web interface.

Technical data

- Voltage supply: 24 VDC
- ASi-Bus
  - Connection: terminal
- Ethernet
  - Baud rate: 100BASETX / 10 Mbps
  - Connection: RJ45

General data

- Installation: 35 mm DIN top-hat rail
- Dimensions (H x B x T): 105 x 23 x 111 mm
  ASi-INspektor®
- Dimensions (H x B x T): 105 x 23 x 111 mm
  ASi-INspektor with Switch and Pure-box
- Industrial protection: IP20
- Ambient temperature: 0 °C to 55 °C
- Storage temperature: -25 °C to 85 °C

Scope of delivery StarterKIT

- ASi-INspektor®
- M12 cable to ASi-BUS
- ASiMA (ASi-Messadapter M12)
- Patch cable
- Switch for ASi-INspektor®
- Pure-box to provide the ASi-INspektor® web interface
- User manual

Ordering details	Art. No.
ASi-INspektor®	124040000
StarterKIT ASi-INspektor®	124040002
Active measuring point ASiMA IP67	120040000
M12 cable	120010003
Ethernet patch cable	124080003
Ethernet patch cable crossover	124080002

ASi-INspektor® with Webinterface (StarterKIT)

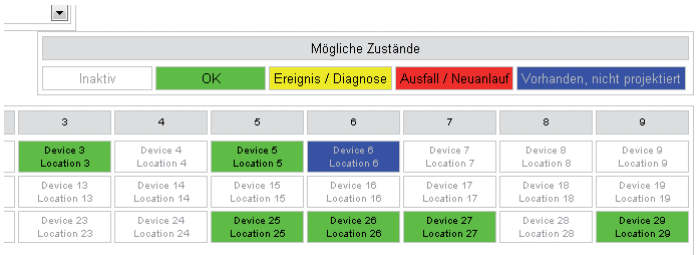

Device list ASi-INspektor®

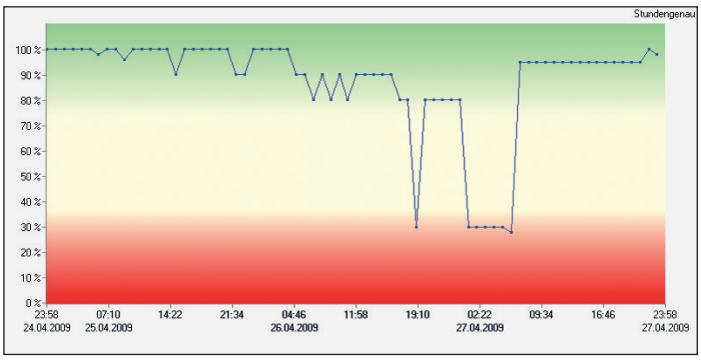

Network status ASi in PROmanage® NT

ASi Diagnostic Set

ASi Diagnostic Set

- ASi View
- ASi-INspektor®
- ASi insulation monitor
- Measuring point ASiMA IP67
- ASi plug
- Case

Ordering details	Art. No.
ASi Diagnostic Set	120010002

Note

With the ASi Diagnostic Set you are well-prepared for any task: these diagnostic tools and components provide for troubleshooting, network diagnosis and regular service of your ASi plant.

Your advantage

The diagnostic set for AS-Interface provides all essential tools in a set. You will benefit from a discount of 10 % against individual purchase of the tools.

ASi Diagnostic Set

Quality tester CANBUSview XL III

Function

The **CANBUSview XL** is a tool for determining the physical and logic communication quality of the data exchange in CAN networks. The measurement is performed online while the system is running. By means of an adapter the hardware is plugged feedback-free onto the CAN. The measuring and test results are displayed through a software on your PC. A standardized USB interface is used for the connection to the PC. We recommend to use the two ends of each segment/master system as measuring location in the CAN network. For this purpose suitable measuring points have to be provided.

The measuring principle

CAN protocols
With the CANBUSview XL various CAN protocols can be analysed and evaluated in terms of quality, such as CAN, CANopen, SafetyBUS p and DeviceNet. Prior to the measurement the user is requested to select the relevant CAN protocol.

Physical quality determination

Signal quality
The CAN bus works with a differential voltage signal transmitting the logic telegram content to the lines CAN-H and CAN-L. The amount of the voltage differential and the form of these signals are a measure of the physical transmission quality and signal quality. Every bit andergoes a 64-fold scan. Major parameters used for the analysis are edge steepness, signal-to-noise voltage ratio and ripple of the CAN signal.
The measuring result is recorded over the time and as Q-value in the form of a bar chart. This measuring technique allows an easy and quick determination of the actual quality of the data communication.

Wiring test
To ensure a correct bus wiring, the CANBUSview XL has an integrated wiring test. Any line short-circuits, line break, missing or additional terminating resistor can be detected and eliminated. In addition the loop resistances of the CAN line and the CAN current supply line and the total line length are determined.

Logic quality determination
Parallel to the physical transfer quality determination the CANBUSview XL checks the telegram traffic for defective telegrams, missing acknowledgements and overload of bus devices as well as the general bus capacity utilization. The online trigger is used to analyse the communication quality over several days / weeks. This helps to detect sporadic communication faults and allocate the same to a certain period of time. The online trigger is capable of analysing physical and logical faults.

Ordering details	Art. No.
CANBUSview XL III for CAN	119010001
Extension CANopen / SafetyBUS p	119010002
Extension DeviceNet	119010003
Extension SAE J1939	119010004
Extension CANopen Monitor	119010005

CANBUSview XL III

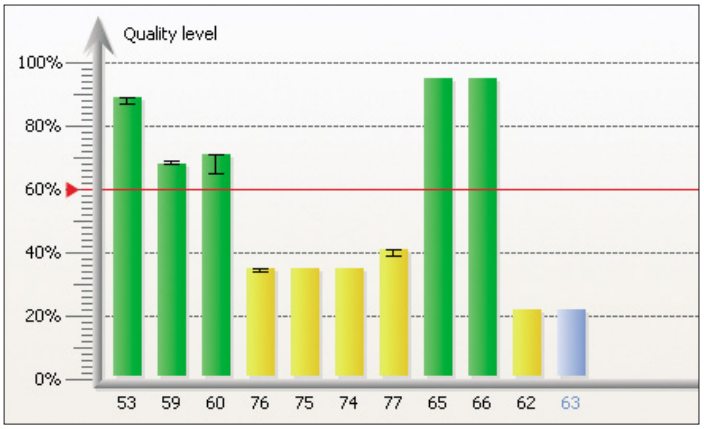

Bar chart

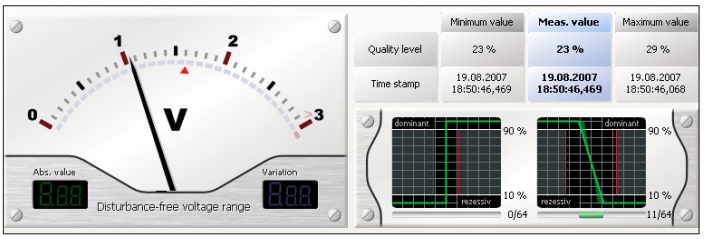

Individual measurement

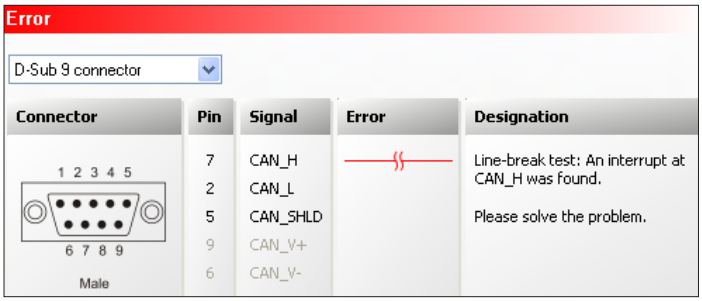

Wiring test

Leakage current clamp EMCheck® LSMZ I

Function

The leakage current clamp EMCheck LSMZ I is specially designed to measure leakage and shield currents in the frequency ranges of 50/60 Hz and 5 Hz to 1 KHz. It is characterized by a large opening (2.8 cm) for cable to led through, so that a comfortable measurement is also possible in unfavorable installation situations. The measuring tool features a broad measuring range from 30 µA to 100 A with the lower range being of particular interest. Through the holding-function it is possible to perform permanent measurements, such as maximum current. Shield currents are a problem for high frequent field bus cables to originate from a frequently missing or bad potential equalisation as well as a magnetic interference by a power supply cable.

Advantages

- Illuminated display
- Shield current measurement
- Measuring range up to 100 A
- Wide opening of shield current clamp (up to 2.8 cm)
- Holding functions allow a permanent measurement at maximum current
- Frequency changeover (50/60 Hz - 5 Hz ... 1 kHz)
- Shielded sensor

Tool information

- Manual selection of measuring range
- Integrated data storage
- Auto power-off (Battery life indicator)

Measuring range

• AC current:	30 µA to 100 A
Tolerance:	1.2 % ± 5 Digit (50 to 60 Hz)
	2.5 % ± 5 Digit (60 to 500 Hz)
	3.5 % ± 10 Digit (500 Hz to 3 kHz)
• Voltage AC:	0,1 to 600 V
Tolerance:	1 % ± 5 Digit (50 to 60 Hz)
	1.2 % ± 1 Digit (60 to 500 Hz)
	2.5 % ± 5 Digit (500 Hz to 3 kHz)
• Input impedance:	1 MOhm
• Resistance:	0.1 Ohm to 1 kOhm
Tolerance:	1 % ± 3 Digit
• Continuity:	< 35 Ohm

Frequency range

• Current / voltage AC:	5 Hz to 1 kHz; 50/60 Hz
• Frequency measurement:	50 Hz to 3 kHz

Technical data

• Safety in accordance with:	IEC61010-1 release 95
	IEC61010-2-032 release 93
• Isolation class:	Class III
• Overvoltage category:	CAT III 600 V
• Pollution degree:	2
• Display:	4 digit LCD; 9999 Digits
• Clamp opening:	ø 28 mm
• Power supply:	2 x 1.5 V; AAA or LR3
• Strong immunity to spurious currents:	70 dB
• Dimensions (L x H x W):	218 x 64 x 30 mm
• Weight: 2	80 g incl batteries

Leakage current clamp EMCheck® LSMZ I

Ordering details	Art. No.
EMCheck® LSMZ I	122010005
Measuring clamp Set EMCheck® (MWMZ II & LSMZ I)	122010006

Mesh resistance measuring clamp EMCheck® MWMZ II

Applications

The mesh resistance measuring clamp **EMCheck® MWMZ II** is an essential measuring instrument for anybody for whom intuitive statements on the quality of the installed shield and earth measures are not enough.

The measuring clamp can be used for:

- Measuring shield loop resistances of bus cables or measuring system cables, for example. Good shield loop resistances should be in a range up to approx. 0.6 Ohm. An adequately low shield loop resistance is a basic requirement for a good shield effect.
- Measuring the PE cables laid pursuant to DIN EN 50310 to achieved good equipotential bonding. Good PE loop resistances should be in a range up to approx. 0.3 Ohm. An adequately low PE loop resistance is a basic requirement for ensuring a good signal reference potential.
- Measuring the quality of the shield on the motor cable of frequency controlled motors and the resistances in the reverse current path.

Measurement results

The clamp consists of two coils. The first coil induces a voltage of a defined level and with a defined frequency (50, 60, 128 or 2083 Hz).

The second coil measures the current induced by coil one in the adjusted frequency range. The ration of these two values can then be used to find and display the alternating current resistance (impedance). The measurement is made without interruption and can also be carried out on conductors which already carry current during normal operation. If the operating currents are in the frequency range of the clamp and thus falsify the measurement result, the clamp will indicate a “noise” warning.

Technical data

• Display:	OLED 152 segments, active surface 48 x 39 mm
• Max. ø of the loop:	35 mm
• Data storage:	300 measurements with timestamp
• Power supply:	4x 1,5 V Alkaline batteries, LR6 (AA) or 4x Ni-MH batteries
• Interference emitter:	NF EN 61326-1: 2006
• Interference immunity:	NF EN 61326-1: 2006
• Max. overload capacity:	Maximum continuous current 100 A (50/60 Hz), briefly (< 5 s) 200 A (50/60 Hz)
• Dimensions (H x W x D):	262 x 95 x 55 mm
• Weight:	935 g (incl. batteries)
• Seal:	IP 40, Group III device
• Category:	IEC 61010 600 V CAT IV
• Measuring frequency:	50, 60, 128 or 2083 Hz

Measuring characteristics

• Room temperature:	23 ± 3 °C
• Relative humidity:	50 % r. h. ± 10 %
• Battery voltage:	6 V ± 0,2 V
• External magnetic field:	< 40 A/m, no AC field
• External electrical field:	< 1 V/m
• Measured current/ sinusoidal frequency:	50 Hz
• Distortion level:	< 0,5 %

EMCheck® MWMZ II

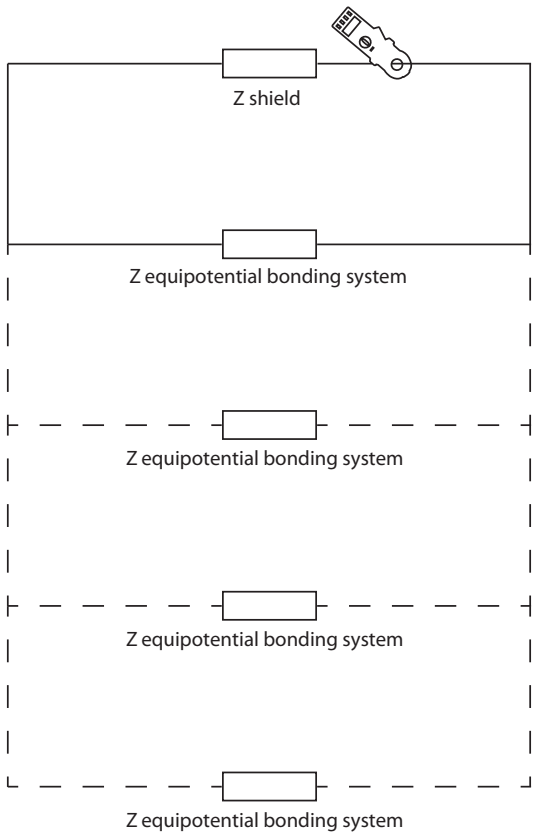

Example of a shield resistance measurement

Ordering details	Art. No.
EMCheck® MWMZ II	**122010010**
Measuring clamp set EMCheck® (MWMZ II und LSMZ I)	**122010006**

Measuring Clamp Set EmCheck®

Case content

- Leakage current clamp EmCheck® LSMZ I
- Mesh resistance measuring clamp EmCheck® MWMZ II
- Accessories
- Manual
- Case

Ordering details	Art. No.
Measuring Clamp Set EmCheck®	122010006

Measuring Clamp Set EmCheck® XL

Case content

- Leakage current clamp EmCheck® LSMZ I
- Mesh resistance measuring clamp EmCheck® MWMZ II
- Intelligent measuring clamp EmCheck® ISMZ
- Accessories
- Manual
- Case

Ordering details	Art. No.
Measuring Clamp Set EmCheck® XL	122010007

Messzangenkoffer EmCheck®

Note

Correct and proper groanding and earthing ensures not only the protection of persons from dangerous contact voltages, but also it is a prerequisite for the andisturbed operation of automation systems.

To detect the quality of EMC compatible installation a measurement of the resistance in the potential equalisation by using the mesh resistance clamp EMCheck® MWMZ I and the identification of possible shielding currents through the leakage current clamp EMCheck® LSMZ I is recommended. With the set you have all tools on hand to verify the quality of your EMC conform installation.

Your advantage

You will benefit from a discount of 10 % against individual purchase of the tools.

Intelligent current measuring clamp EMCheck® ISMZ I

Function

There are often undesirable interactions between power supply and control technology in complex industrial systems that might cause errors in control engineering. The **intelligent current measuring clamp EMCheck® ISMZ I** is a mobile tool for detecting line-based parasitic currents in industrial plants. It detects values by its own, evaluates and records data.

The integrated intelligence allows first surveys and hence first estimations of EMC susceptibility of plants without drawing on special tools.

Advantages

- Compact, portable, battery-operated current clamp
- Simple and intuitive handling
- Measuring range up to 30 A
- Illuminated graphic display
- Measuring clamp with wide opening (up to 2.8 cm)
- Hold functions for measuring maximum current
- Shielded transmitter
- Data record in an internal memory for a period of up to 14 days
- Data evaluation by related software on a conventional PC
- Simultaneous use of several clamps possible

Device information

- Manual selection of measurement range
- Built-in memory for measured data
- Automatic shutdown (battery level indicator)

Measurement ranges

• AC current:	10 mA to 30 A
• Tolerance:	1.2 % ±5 digits (50 Hz to 60 Hz) 2.5 % ±5 digits (60 Hz to 500 Hz) 3.5 % ±10 digits (500 Hz to 20 kHz)

Frequency range

• AC current:	40 Hz to 5 kHz; 40 Hz to 10 kHz; 40 Hz to 20 kHz 5 kHz/10 kHz/20 kHz

Technical data

• Protection according to:	IEC 61010-1 IEC 61010-2-032 IEC 61010-2-033
• Insulation class:	Class III
• Overvoltage category:	CAT III 300 V
• Level of contamination:	2
• Display:	LCD 128x64; Monochrome transflective
• Clamp aperture:	ø 28 mm
• Power supply:	6x 1.5 V; AA or LR6
• Largely resistant to parasitic currents:	70 dB
• Housing protection class:	IP30
• Dimensions (hxwxd):	264x66x40 mm
• Weight:	502 g incl. battery

Intelligent current measuring clamp EMCheck® ISMZ I

Ordering details	Art. No.
EMCheck® ISMZ I	122010020

EMV INspektor® V2

Function

The increasing power density of the industrial production results in a higher risk of interference currents along the cables, on the conducting paths of the power supply and those of the potential equalization systems. The diagnostic tool EMV-INspektor® V2 allows an automated, contactless and uninterrupted test and detects electromagnetic disturbances temporarily. Up to four current transformers can be connected to the device. The measurement values are recorded separately, evaluated and compared.

EMC disturbances are measured along the fieldbus cable via the 24 VDC power supply, via the 230/400 VAC low-voltage distribution system, in the equipotential bonding system and via the transmitter lines.

Application

- Parallel inspections of multiple potentially disturbed sections
- Comparison of the data from input source components
- Specific condition evaluation and alerting
- Visual illustration of the disturbance values via web interface
- Export of the measurement data to a USB memory or via LAN interface
- Configuration of the device software via web interface

Measuring range

- AC current: 10 mAto 60 A

Measurement approaches

- EMC interferences along the BUS cables
- EMC interferences via the V 24 VDC power supply
- EMC interferences via the 230/400 VAC lowvoltage distribution system
- EMC interferences in the equipotential bonding system
- EMC interferences via the transmitter line

EMV-INspektor® V2

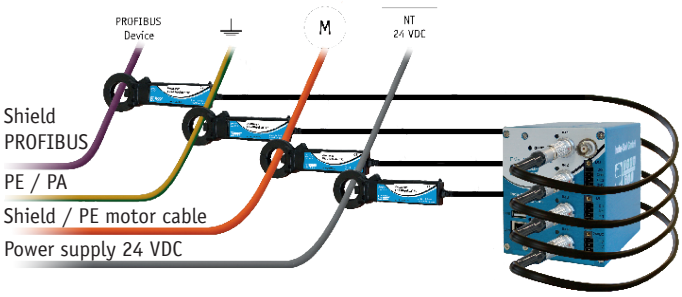

Application

Web interface

Ordering details	Art. No.
EMV-INspektor® V2	122010001

Special-purpose measuring and programming adapter

Function

The **M12 measuring and programming adapter** is used for the connection of an active programming cable to a M M12 interface, e.g. PBMX. The M12 Y measuring adapter is used to connect the measuring devices PROFtest II and PROFI-TM Professional. The measuring adapter PB-DSUB-1 is only used for online measurement with PROFI-TM Professional. It is not suitable for master simulator or topology scan.

Electrical parameters

- Baud rate: 9.6 kbps to 12 Mbps
- Rated voltage: 24 VDC

Ambient conditions

- Temperature range: -20 °C to +40 °C
- Protective system: IP20

Pin assignment

M12 Y measuring adapter

- Pin 1: not assigned
- Pin 2: A-Line
- Pin 3: not assigned
- Pin 4: B-Line
- Pin 5: shield

M12 measuring and programming adapter

- Pin 1: 5 V
- Pin 2: A-line
- Pin 3: GND
- Pin 4: B-line
- Pin 5: Shield

Measuring adapter B-DSUB-1 (for critical plant)

- Pin 1: not assigned
- Pin 2: not assigned
- Pin 3: B-Line (red)
- Pin 4: RTS direction control
- Pin 5: GND
- Pin 6: 5 V
- Pin 7: not assigned
- Pin 8: A-Line (green)
- Pin 9: not assigned

Ordering details	Art. No.
Y-Measuring adapter M12	110020018
Measuring- and programming adapter straight	110020019
Measuring- and programming adapter angled	110020020
Measuring adapter PB-DSUB-1	110020013

M12 Y-measuring adapter

Measuring and programming adapter straight

Measuring and programming adapter angled

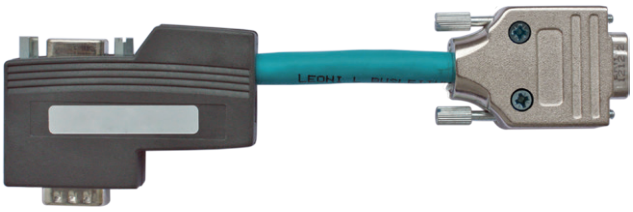

Measuring adapter for critical plant

PROFtest II XL measuring adapter/connecting cable

Function

The **PROFtest II measuring adapter K348 / K349 / K415 and K486** is used for the connection of the measuring devices PROFtest II and PROFview XL to the PROFIBUS.
With the measuring adapter the 5 V come from a device.

Electrical parameters

- Baud rate: 9,6 kBps to 12 MBps
- Rated voltage: 24 VDC

Ambient conditions

- Temperature range: -20 °C to +40 °C
- Protective system: IP20

Pin assignment

- Pin 1: not assigned
- Pin 2: not assigned
- Pin 3: B-Line (red)
- Pin 4: not assigned
- Pin 5: GND
- Pin 6: 5V
- Pin 7: not assigned
- Pin 8: A-Line (green)
- Pin 9: not assigned

Ordering details	Art. No.
PROFtest II measuring adapter K348 Y-Cable	110020006
PROFtest II measuring adapter K349 Cable	110020005
PROFtest II connecting cable K415	110020008
PROFtest II measuring adapter K486 spur line	110020007

PROFtest II measuring adapter K348

PROFtest II measuring adapter K349

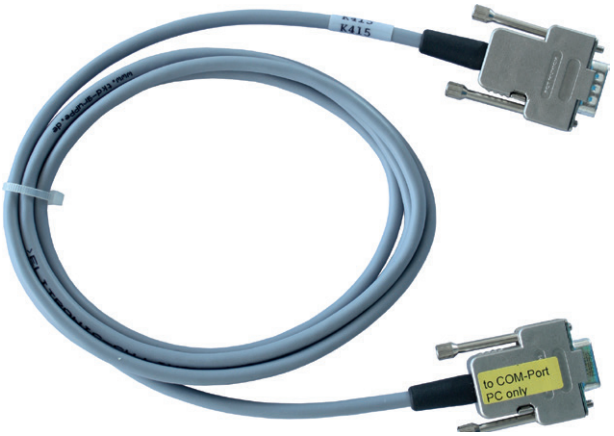

PROFtest II connecting cable K415

PROFtest II measuring adapter K486

Mobile power supply unit MoSt II

Function

The **mobile power supply unit MoSt II** is a very practical accessory for your measuring and test equipment, such as PROFI-TM Professional®. In a rough industrial environment may the necessity of a 230 V supply cause a problem since not every control cabinet provides a socket. Extension cords and cable drums are a way out but finally become an obstacle. The mobile 5-24 VDC power supply unit MoSt II is extremely versatile and due to its robust design ideal for industrial uses.

Furthermore the included accessories provide the voltage supply or the charge of other equipment like mobile phones or laptops.

Electrical parameters

- Capacity:
  - 21`000 mAh in 5V mode
  - 12`500 mAh in 8,4V mode
  - 11`000 mAh in 9,5V mode
  - 8`750 mAh in 12V mode
  - 6`500 mAh in 16V mode
  - 5`500 mAh in 19V mode
  - 4`200 mAh in 24V mode
- Security features:
  - Voltage limiting protection
  - Current limiting protection
  - Short circuit protection
  - Deep discharging protection
  - Overcharge protection
  - Overheat protection (turns off automatically in case of overheating)
- Determined operating time at 0. 2 A (24V): approx. 14 h
- Visual operation display: LCD display

Constructive design

- Dimensions (H x W x D) battery: 215 x 130 x 17 mm
- Weight battery: 700 g
- Housing: Aluminium

Scope of delivery

- MoSt II Transport bag
- MoSt II Connecting cable

Adapter set:
- 4 power adapter
- 12V car adapter
- Measuring tool adapter: PROFI-TM Professional, CANBUSview XL
- Notebook adapter for ASUS, Compaq, Trigem, Acer, IT, Winbook, Alpha-Top, Compaq, Gateway, IBM, Itronix, Samsung, Toshiba, Baycom, ChemUSA, DELL, Digital, Dual, E-Machine, Featron, Epson, Hitachi, HP, Jerbook, LEO, NEC, Primebook, Quantex, Sharp, Twinhead, Viewsonic, AMI, Fujitsu, Panasonic, Sony, Apple MacBook Pro & MacBook Air according to 12 V car adapter
- Cell phone adapter for the latest Nokia, Motorola, LG, Samsung, Sony Ericsson (oblong plug)
- Mini USB
- USB cable

Mobile power supply unit MoSt II

Transport bag with integrated connecting lug

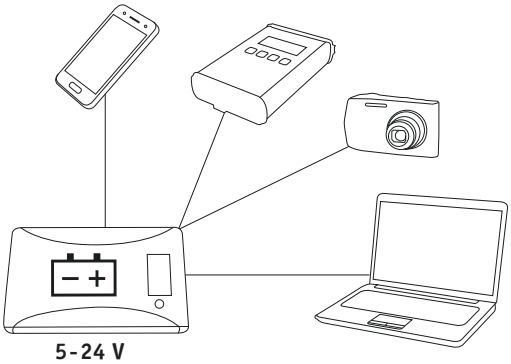

Multifunctional, mobile power supply unit for laptop, mobile phone, camera or diagnostic tools

Ordering details	Art. No.
MoSt II set	110020035
consists of:	
MoSt II Power station	110020036
MoSt II Transport bag	110020037
MoSt II Connecting cable	110020038

Permanent network monitoring

PROFIBUS DP/PA **34**

PROFIBUS-INspektor® NT 34
INBLOX® Modular INspektor® 35
INBLOX® Ethernet head module 36
INBLOX® DP Diag+ Rep 37
INBLOX® DP Diag Master 38
INBLOX® DP PA Diag+ 39
INBLOX® alarm module 40

Ethernet/PROFINET **41**

PROFINET-INspektor® NT 41

ASi **42**

Decentralized data Logger ASi-INspektor® 42

EMV **43**

EMV-INspektor® V2 43

Network management software PROmanage® NT **44**

Configuration example PNM **45**

OPC Server – Field bus warning in the control system **46**

Abisolierwerkzeuge

Fast Connect Stripping Tool

Function

Das **Fast Connect Stripping Tool** ist ein Abisolierwerkzeug für PROFIBUS-/Ethernet-Kabel. In einem Arbeitsgang wird das Leitungsende anschlussfertig nach Standard Fast Connect konfektioniert.

Anwendungshinweis

- Die Justierung der Messer erfolgt mittels eines Imbusschlüssels an der Seite des Stripping Tools.
- Legen Sie das PROFIBUS- oder Ethernet-Kabel in das Stripping Tool. Hinweis: Isolieren Sie die Leitung ruhig etwas länger ab. Falls notwendig, kann die Leitung auch im Nachgang gekürzt werden.
- Halten Sie die Leitung fest und drehen Sie das Stripping Tool um die Leitung. Je nach Leitungstyp und Einstellung der Messer sind 2 bis 4 Umdrehungen notwendig.
  Hinweis: Zu beachten ist, dass das abzumantelnde Leitungsende bei der Konfektionierung nicht abgedreht wird.
- Bei richtiger Anwendung ist das PROFIBUS- oder Ethernet-Kabel fast anschlussfertig konfektioniert, so dass nur, falls erforderlich, noch die Datenleitungen abisoliert werden müssen.

EmFlex Strippingtool

Function

Das **EmFlex Strippingtool** ist ein Abisolierwerkzeug mit dem Sie flexibel und individuell arbeiten. Es besitzt ein besonders kleines und handliches Gehäuse, welches optimal für den Einsatz bei engen und begrenzten Platzverhältnissen wie z. B. im Kabelkanal bestimmt ist.
Die gefederten Kunststoffkrallen passen sich automatisch dem jeweiligen Kabeldurchmesser an. Das schwenkbare Messer ist für Rund- und Längsschnitte sowie Schnitttiefe einstellbar. Durch Runddrehen und Längsziehen wird der Kabelmantel sequenziell an jeder beliebigen Stelle des Kabels abgemantelt.

Anwendungshinweis

- Aufbrechen eingeschnittener Isolation mittels integrierter Schneide
- variable Schnitttiefeneinstellung (von 0,8 bis 2,5 mm)
- Auch extrem harte Isolierung und große Abmantellängen sind problemlos möglich
- Abmanteln der Isolation an jeder beliebigen Stelle des Kabels möglich

Technical data

- Abmessungen (H x B): 40 x 55 mm
- Abisolierbereich Durchmesser: 6-17 mm
- Gewicht: 60g

Bestellangaben	Art.-Nr.
PROFIBUS Fast Connect Stripping Tool	110020032
Ethernet Fast Connect Stripping Tool	112020005
EmFlex Strippingtool	122130010

Stripping Tools (PROFIBUS und Ethernet) und EmFlex Strippingtool

PROFIBUS Fast Connect Stripping Tool

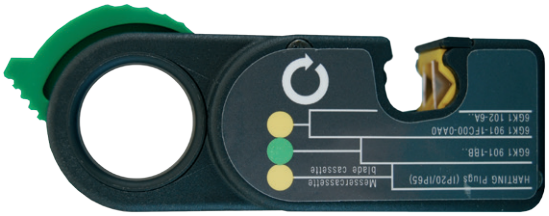

Ethernet Fast Connect Stripping Tool

EmFlex Strippingtool

Topology plan software TOPOCAD

Function

CAD software for documentation of automated systems

TOPOCAD is used to create topology plans on the computer. A comprehensive macrolibrary, for PROFIBUS components for example, allows fast working. Even unexperienced users will be able to create topology plans after a short period of familiarization. On a clearly arranged user interface the required components are put on the circuit diagram by Drag & Drop. Thanks to a freely definable grid the individual elements can be easily placed and wired. Components can be combined to form groups.

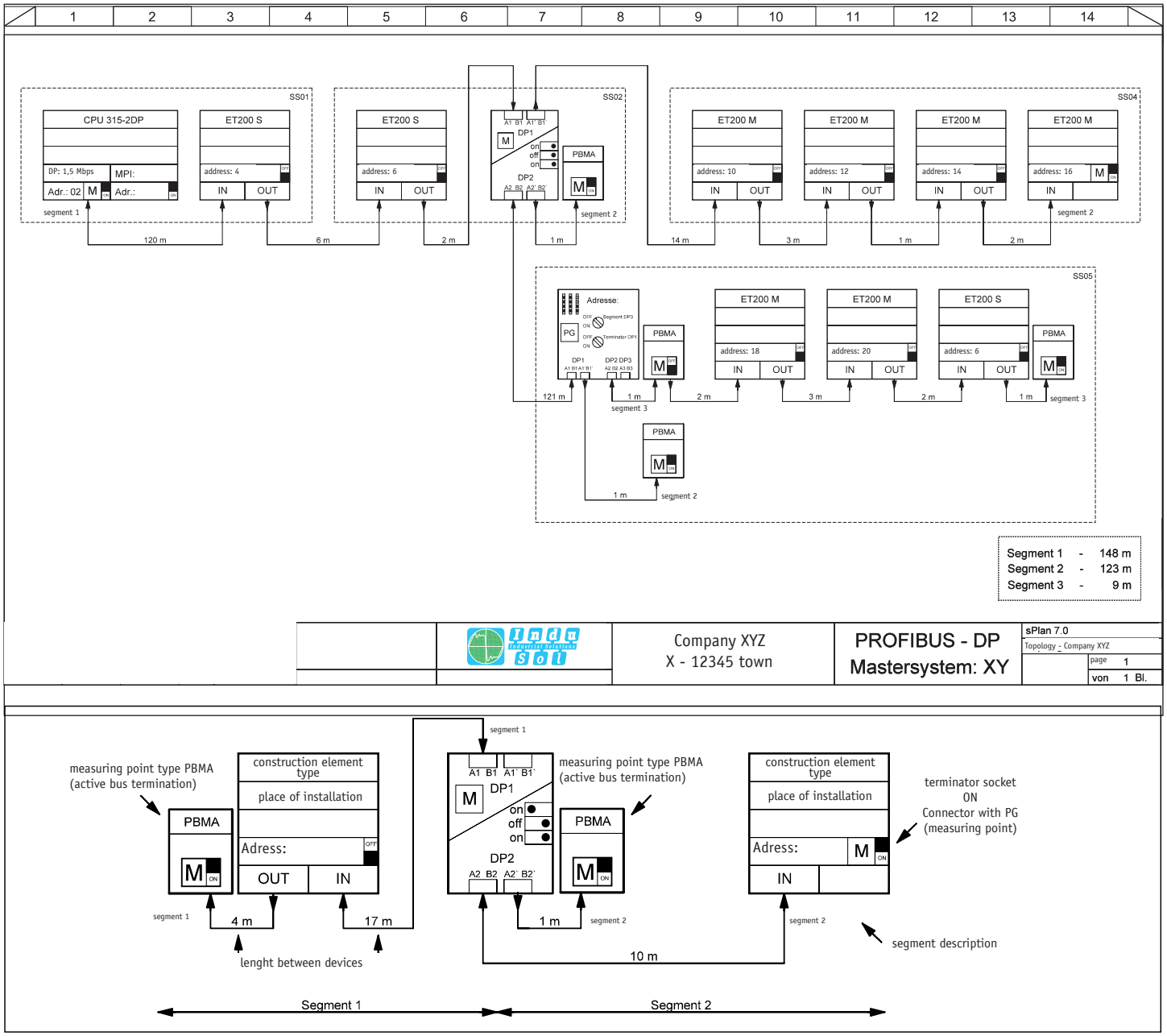

Operating systems

- Windows 98, Windows ME, Windows NT ,Windows 2000, Windows XP, Windows Vista, Windows 7, Windows 8

Ordering details	Art. No.
TOPOCAD	110010012

Permanent network monitoring

PROFIBUS DP/PA **34**

PROFIBUS-INspektor® NT 34
INBLOX® Modular INspektor® 35
INBLOX® Ethernet head module 36
INBLOX® DP Diag+ Rep 37
INBLOX® DP Diag Master 38
INBLOX® DP PA Diag+ 39
INBLOX® alarm module 40

Ethernet/PROFINET **41**

PROFINET-INspektor® NT 41

ASi **42**

Decentralized data Logger ASi-INspektor® 42

EMV **43**

EMV-INspektor® V2 43

Network management software PROmanage® NT **44**

Configuration example PNM **45**

OPC Server – Field bus warning in the control system **46**

PROFIBUS-INspektor® NT

Function

The **PROFIBUS-INspektor® NT** monitors the logical data traffic as a passive data collector and gives alarm when first abnormalities are detected – not just when the plant already broke down. Quality-related events, such as:

- Repeat telegrams
- Error telegrams
- Device diagnostics
- Device failures and restarts
- Bus cycle time
- Bus speed

are analyzed, stored and evaluated for each device. The PB-INspektor® NT can be used as a temporary measuring tool, e.g. for commissioning and service or for permanent network monitoring. The contact between the PROFIBUS-INspektor® NT and the bus is rendered through an active programming cable APKA II (Art. No.: 110040001) or the INspektorr® can be directly connected like a PROFIBUS node.

As soon as a threshold value is exceeded the INspektor® gives an alarm and warns timely for aimed maintenance measures that are plannable now. An alarm list in the INspektor® provides detailed information about the error time, the device where the error occurred and the event (exceeded threshold value). The large memory space enables storing up to 2,000 alarms. Each alarm has a snapshot of 500 telegrams.

Your PROFIBUS topology is shown directly according to the INspektors® web interface. A plain overview of your network is provided showing immediately the current condition of all PROFIBUS nodes.

Technical data

• Voltage supply:	+24 VDC ±10 %, 0,2 A
• PROFIBUS	
- Protocols:	DP, DPV1, DPV2, FMS, MPI
- Connection:	9-pol. Sub-D
- Baud rate:	9,6 kBit/s bis 12 MBit/s
• Ethernet	
- Baud rate:	10 / 1000 MBit/s
- Connection:	RJ45

General data

• Installation:	35 mm DIN rail
• Dimensions (H x W x D):	105 x 54 x 124 mm
• Protective system:	IP20
• Operating temperature:	+5 °C bis +55 °C

Alerting options

- Email alert
- Floating contact
- LED display
- SNMP trap

Scope of delivery StarterKIT

- PROFIBUS-INspektor® NT
- Active programming cable APKA II
- Patch cable
- Case

PROFIBUS-INspektor® NT

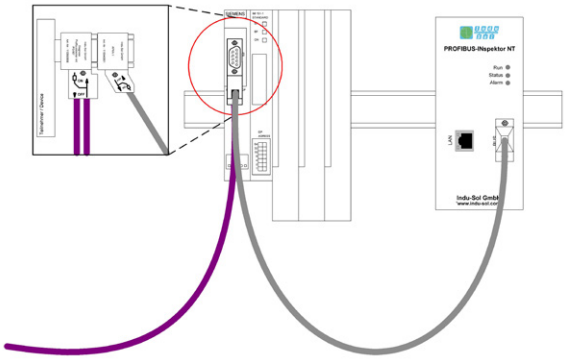

Connection according to APKA II

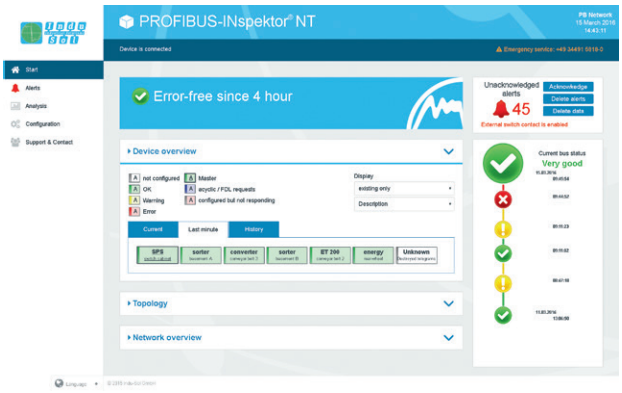

Web interface

Ordering details	Art. No.
PROFIBUS-INspektor® NT	124010020
PROFIBUS-INspektor® NT StarterKIT	124010021

INBLOX® – Modular system for your PROFIBUS

Function

A reliable and andisturbed operation of modern production plants and industrial installations is essential these days. Therefore, a clear structuring and monitoring is not only useful in our eyes, but also urgently needed

Indu-Sol provides with INBLOX® a modular solution geared to the customer's needs - the modular system for your PROFIBUS!

You have thus a means to monitor the field bus and the field devices in one single application. Events that can be evaluated in the analysis are:

- Simple Display according to LED,
- Physical network diagnosis,
- Remote and permanent Monitoring.

Besides displaying of the network health according to LED the INBLOX® repeater monitors permanently the logical data traffic of PROFIBUS DP and PA. All data are shown clearly on a web interface. Depending on the module you are able to monitor and analyse the physical transmission quality with quality values in a bar diagram. Additional measuring tool for monitoring the fieldbus quality is not anymore necessary.

The Modular INspektor® with head module and extension modules

INBLOX® Configurator

Inform yourself on **www.inblox.de** and find the suitable solution for your plant.

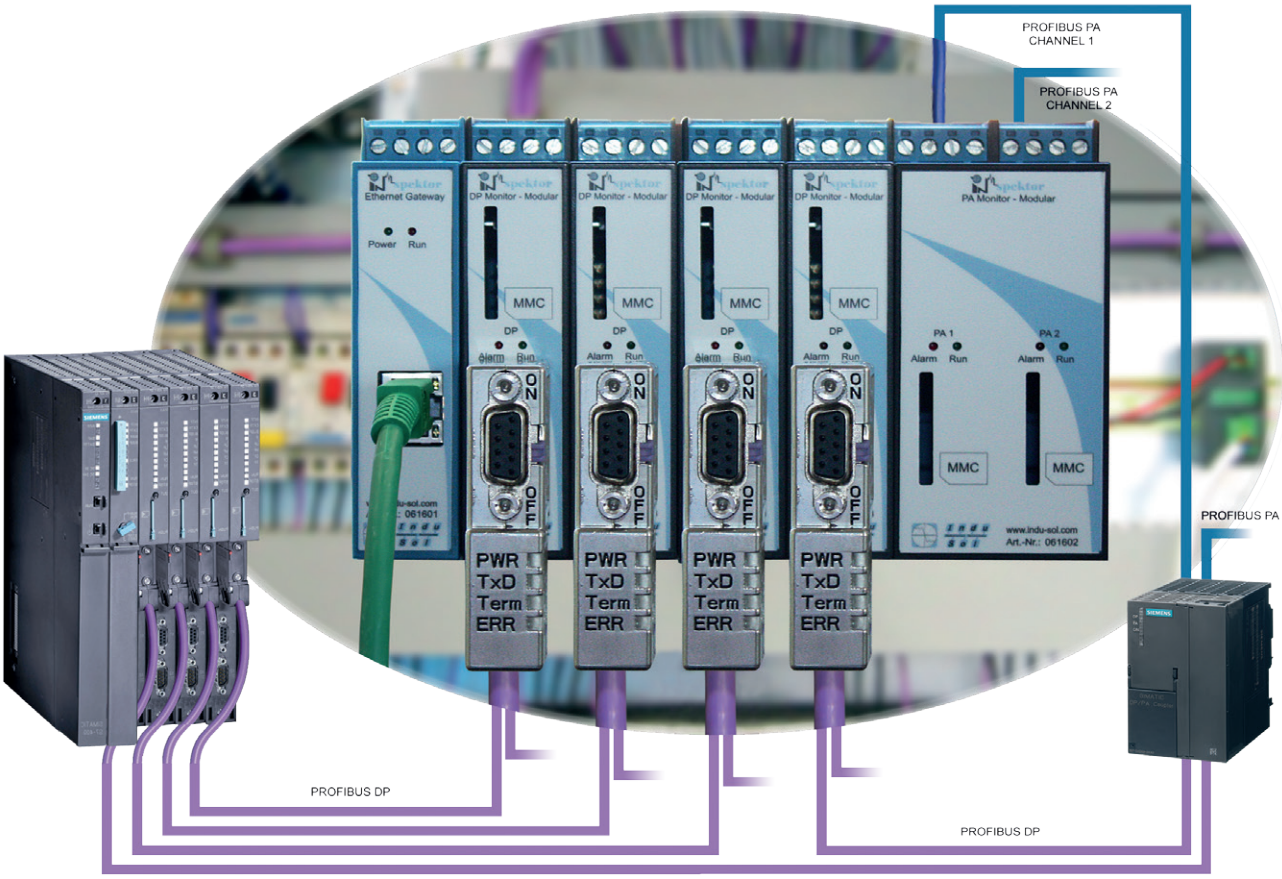

INBLOX® Ethernet head module

Function

The **Ethernet head module** is the basis of the smart version of the INBLOX® series. In addition to its 24 V supply voltage connection it has got a LAN connection for the integrated web server. The head is the core of the smart INBLOX® series and can be extended to max. 20 segments and 10 Master systems by Diag Rep modules and Diag+ Rep modules. An alarm module can be connected in place of a fifth extension module. Event alarms are then given by switching contacts.
The E-head is provided with an extended logic and alarms are shown on the web screen as known from the INspektor®. For every extension module a device matrix with certain colours for relevant events can be displayed and the alarms stored as snapshots (up to 100 per extension module).
The head has different options to alert the user in case of network deterioration. It is possible to send an e-mail, an SNMP trap or the INBLOX® can be integrated in a network monitoring software, such as PROmanage® NT.

Technical data

- Voltage supply: 24 VDC
- Power supply: 0,3 A
- Connection: screw terminal for 24 V voltage supply
  LAN-Connection for Web interface
- Baud rate: 9,6 kbps to 12 Mbps

- Ethernet:
  - Baud rate: 100 Mbps / 10 Mbps
  - Connection: RJ45
  - Protocols: IPv4 according to DHCP or manual
  - Time server: NTP-time synchronizing

General data

- Installation: 35 mm DIN top-hat rail
- Dimensions (H x W x D): 114,5 x 22,5 x 99 mm
- Protective system: IP20
- Operating temperature: 5 °C bis 55 °C
- Storage temperature: -20 °C bis 70 °C
- PROFIBUS types: DP, DP-V1, FMS, MPI
- Extensions: DP Diag+ Rep; DP Diag Master; PA Diag+; Diag Rep X1, X2, X4; alarm module
- Automatic alarm: Email
  SNMP-Trap
  SNMP-request with PROmanage® NT

LED

Power: lights up green, if 24 V is connected

Run: lights green at 1Hz rate, if everything is o.k.

Ordering details	Art. No.
INBLOX® Ethernet head module (E head)	**124060000**

Ethernet head module

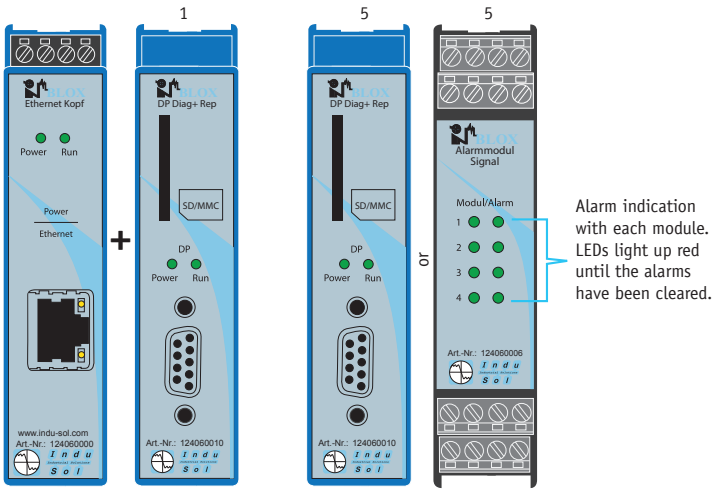

Samlpe configuration Comfort Line

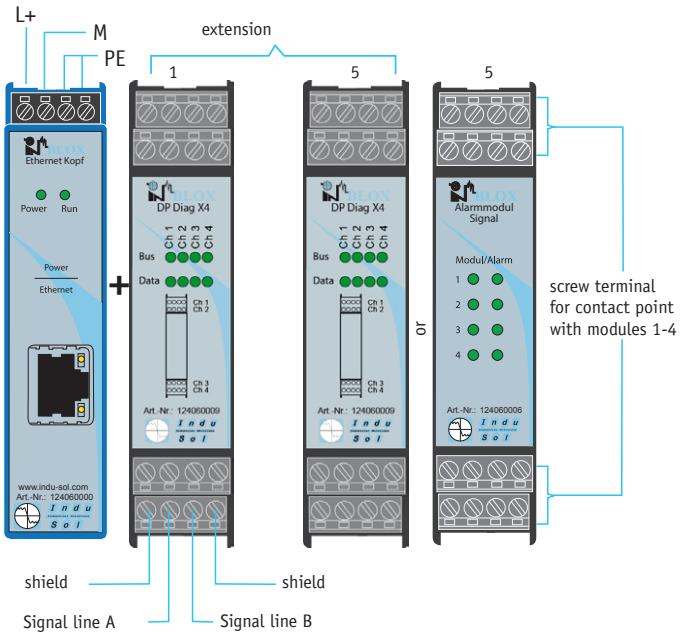

Samlpe configuration Premium Line

INBLOX® DP Diag+ Rep

Function

The **DP Diag+ Rep** extension is provided with a D-subminiature connector and can thus open a segment.

It is simply connected to the head and is coupled with the backplane bus directly. It is according to the need of a separate voltage supply. Not only peripheral participant and devices can be connected to the segments but also other master systems.

Up to five extension modules can be connected to every head. It is thus possible to create up to five segments per head module. The PROFIBUS can be converted from its original line topology to a star topology and spur lines designed without reservation.

Each individual segment is monitored by the integrated diagnosis. The alarm LED displays errors diagnosed during monitoring. These DP Diag+ Rep modules require the E-head for design. According to the web interface the device matrix can be displayed and the relevant diagnoses (error telegrams repeat telegrams etc.) read out. The bus physics, too, is permanently monitored for the first time and can be displayed by a bar chart for the quality characteristics or an oscilloscope recording.

Technical data

- Voltage supply: 24 VDC with a backplane bus
- Power supply: 0,3 A with a backplane bus
- Connection: 9-pole sub-D PROFIBUS-connection
- Baud rate: 9,6 kbps to 12 Mbps

General data

- Installation: 35 mm DIN top-hat rail
- Dimensions (H x W x D): 114,5 x 22,5 x 99 mm
- Protective system: IP20
- Operating temperature: 5 °C to 55 °C
- Storage temperature: -20 °C to 70 °C
- PROFIBUS-types: DP, DP-V1, FMS, MPI
- Characteristics: card slot for SD/MMC memory cards

LED

Alarm: Signal lights red, when alarm is lying ahead

Run: lights up green, if everything is o.k.

Ordering details	Art. No.
INBLOX® DP Diag+ Rep	124060010

INBLOX® DP Diag+ Rep

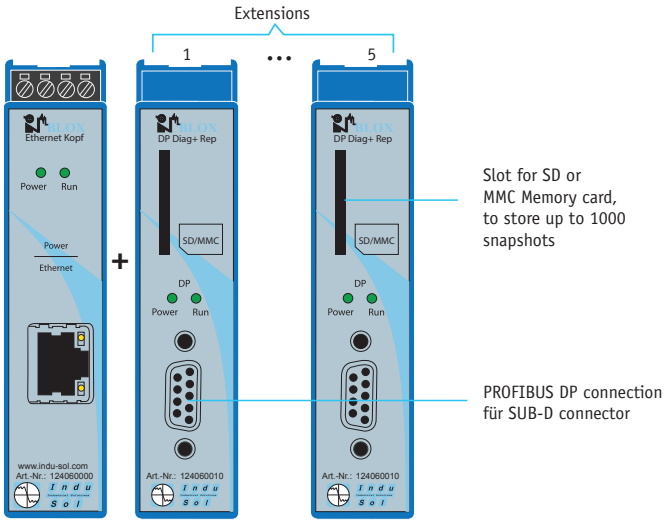

Sample configuration

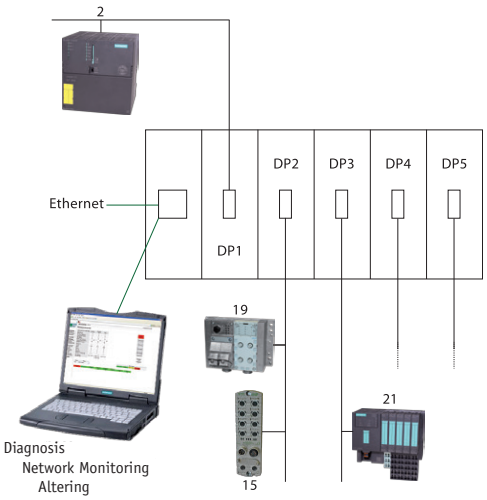

Practical example

INBLOX® DP Diag Master

Function

The use of a **DP Diag Master module** for the PROFIBUS DP makes it possible to do FDT/DTM parameterization. The parameterization needs not more than a framework application, e.g. PACTware. It is thus possible to parameterize and configure devices and modules according to Ethernet as master class 2.

Technical data

- Voltage supply: Via head module
- Connection: RS-485 socket
- Baud rate: 9,6 kBit/s to 12 MBit/s

General data

- Installation: 35 mm DIN top-hat rail
- Dimensions (H x W x D): 114,5 x 22,5 x 99 mm
- Protective system: IP20
- Protocols: DP, DPV1

INBLOX® DP Diag Master

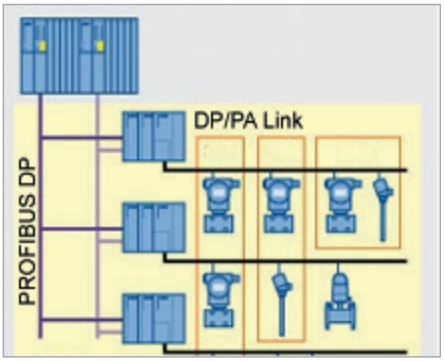

Example of a plant

	0	1	2	3	4
0	00	01	02	03	04
1	10	11	12	13	14
2	20	21	22	23	24

Okay | Attention | Failure

Device matrix

Ordering details	Art. No.
INBLOX® DP Diag Master	124060003

INBLOX® PA Diag+

Function

The PROFIBUS PA Diag+ module is capable of monitoring, analysing and displaying two PA segments at the same time. Like the PROFIBUS DP the PROFIBUS PA analyses and evaluates logic parameters. Besides the error telegrams and repeat telegrams it comprises diagnostic messages of the individual devices and device failures.

Technical data

- Voltage supply: via head module
- Power supply: 0,3 A
- Connection: 2 screw terminal
- Baud rate: 31,25 kbps

General data

- Installation: 35 mm DIN top-hat rail
- Dimensions (H x W x D): 86 x 45 x 110 mm
- Protective system: IP20
- Protocols: PROFIBUS PA

Device rmatrix

	0	1	2	3	4
0	00	01	02	03	04
1	10	11	12	13	14
2	20	21	22	23	24

Okay | Attention | Failure

Terminal configuration

PA Diag+

Terminal connection

Channel 1		Channel 2	
2	PA+	6	PA+
3	PA-	7	PA-
1+4	Shield	5+8	Shield

Alarm: signal lights red, when alarm is lying ahead

Run: lights up green, if everything is o.k.

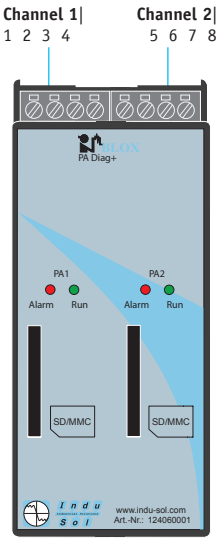

Ordering details	Art. No.
INBLOX® PA Diag+	124060001

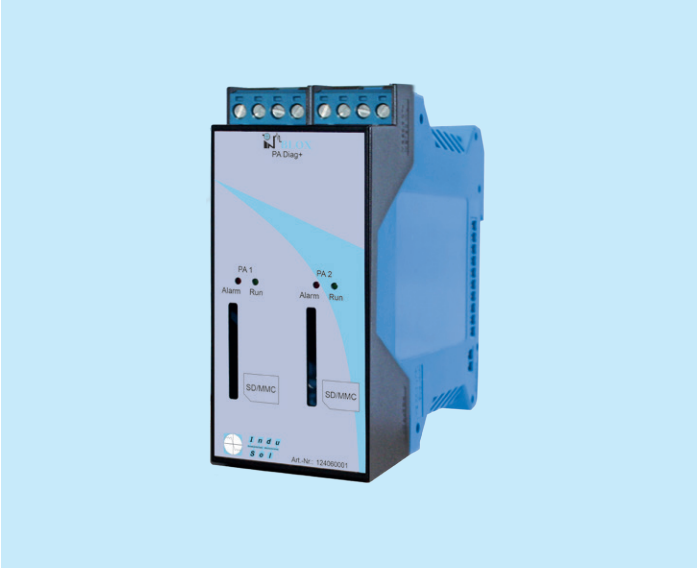

INBLOX® PA Diag+

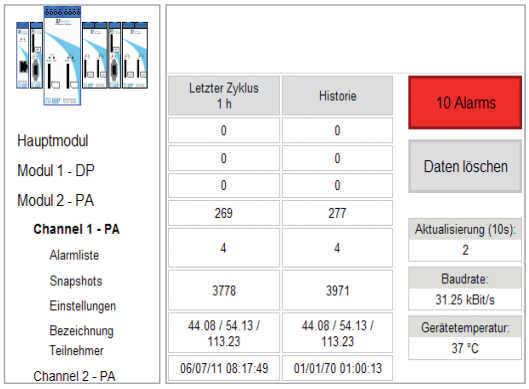

PROFIBUS PA diagnosis with PA Diag+

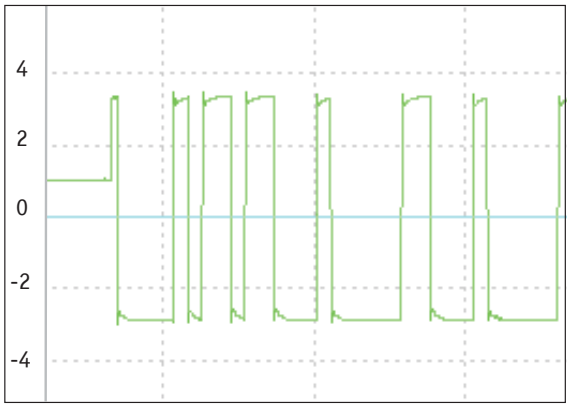

Device Matrix terminal assignment

INBLOX® alarm module

Function

The **alarm module** comes with four terminals and is capable of monitoring one INBLOX® module per terminal. If available, it is always the last module to be connected and is coupled directly according to a backplane bus. Therefore no separate voltage supply is needed. Every terminal/channel has got a switching output for alarms and a reset input. The alarm module can be installed in connection with the E-head only.
In case of alarm the alarm LED lights up until it is cleared manually according to the web interface or the reset input is actuated. The different alarm LEDs show which INBLOX® module is affected. The web interface of the E-head is used to select the relevant module to show the relevant device and detailed information.

Technical data

- Connection: 4 screw terminals
- Voltage supply: 24 V with a backplane bus
- Power supply: 0,3 A with a backplane bus

General data

- Installation: 35 mm DIN top-hat rail
- Dimensions (H x W x D): 114,5 x 22,5 x 99 mm
- Protective system: IP20
- Operating temperature: 5 °C to 55 °C
- Storage temperature: -20 °C to 70 °C

Terminal configuration

Alarm module

Terminal connection

Alarm for module 1		Alarm for module2	
1	IN+	5	IN+
2	IN-	6	IN-
3+4	OUT	7+8	OUT

Alarm for module 3		Alarm for module4	
9	IN+	13	IN+
10	IN-	14	IN-
11+12	OUT	15+16	OUT

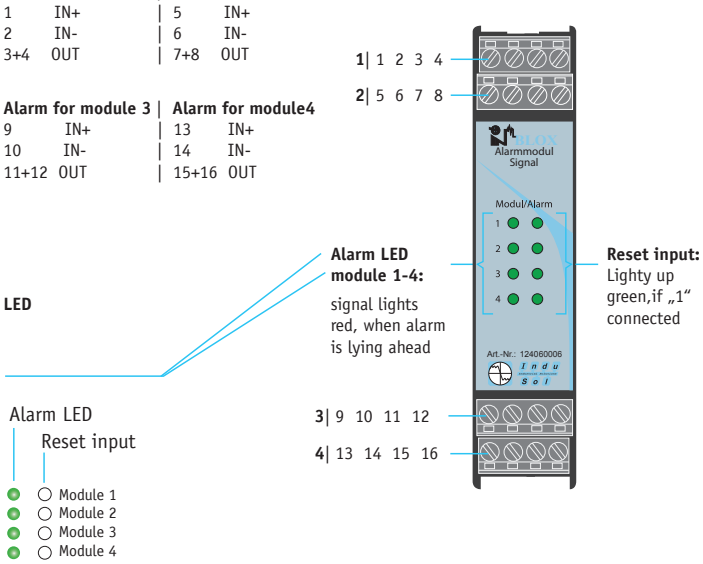

Ordering details	Art. No.
INBLOX® alarm module	124060006

INBLOX® alarm module

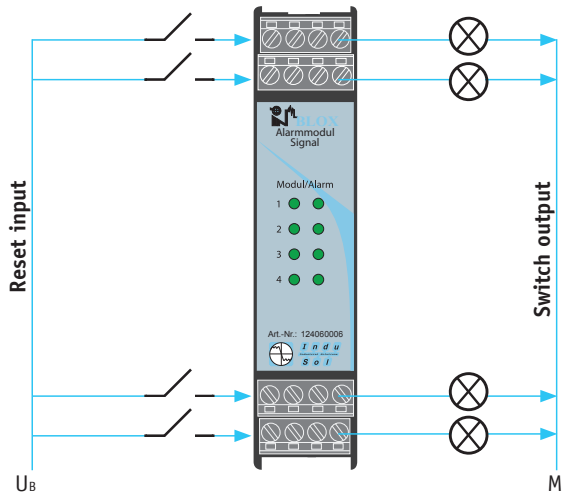

Connection diagram

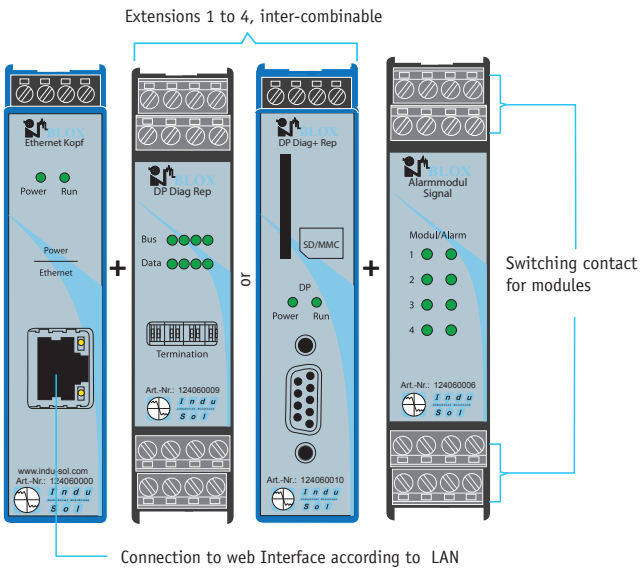

Sample configuration

PROFINET-INspektor® NT

Function

The **PROFINET-INspektor® NT** is a passive data collector that analyzes telegram traffic in PROFINET and Ethernet networks in terms of events like

- Utilization rate,
- Speed,
- Data throughput,
- Telegram jitter,
- Repeat telegrams,
- Error telegrams,
- Device diagnostics and
- Device failures.

This information reflects the current condition of the communication quality in the network concerned and provides the basis for a condition-based maintenance. By storing data in the device events on the bus may also be traced and evaluated later. Due to an integrated web server the network status can be displayed on any PC by internet browser without requiring additional software.

It is recommended to install the PROFINET-INspektor® permanently in the network connection between controller and first IO device or switch, since the majority of communication merges typically in this connection.

New features compared to predecessor

- Display that shows errors directly
- Net load displayed with resolution in milliseconds
- Alarms when unknown devices appear
- Option to carry out active or passive network diagnosis
- Uninterrupted monitoring, even at high net load

Technical data

- Voltage supply: +24V DC ±10%
- PROFINET
  - Protocols: RT, CBA
  - Connection: RJ45 (IN / OUT)
  - Baud rate: 10 / 100 Mbps
- Ethernet
  - Baud rate: 10 / 100 Mbps
  - Connection: RJ45
  - MDI/MDIX

General data

- Installation: 35 mm DIN top-hat rail
- Dimensions (H x W x D): 105 x 105 x 124 mm
- Protective system: IP20
- Ambient temperature: +5 °C bis +55 °C

Scope of delivery StarterKIT

- PROFINET-INspektor® NT
- Power pack
- Active programming cable APKA II
- Patch cable crossover
- Patch cable
- Line set 24V/230V
- Case and Manual
-

ROFINET-INspektor® NT

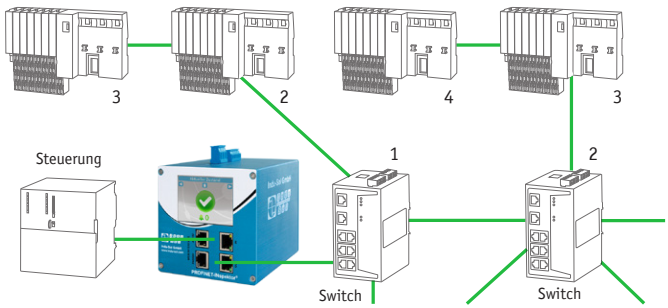

PROFINET-INspektor® NT „Its position in network“

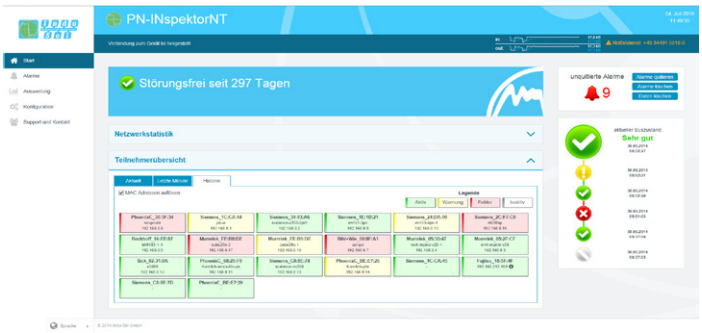

Web interface

Ordering details	Art. No.
PROFINET-INspektor® NT	124030100
PROFINET-INspektor® NT StarterKIT	124030120

Decentralized data logger ASi-INspektor®

Function

The **ASi-INspektor®** is a passive data logger that analyses the telegram traffic of ASi networks for events, such as

- Error telegrams,
- Repeat telegrams,
- Package error
- Device diagnosis and
- Device failures.

This information reflects the current status of the communication quality in ASi networks. All collected network data can be retrieved according to Ethernet using an integrated web interface.

Technical data

- Voltage supply: 24 VDC
- ASi-Bus
  - Connection: terminal
- Ethernet
  - Baud rate: 100BASETX / 10 Mbps
  - Connection: RJ45

General data

- Installation: 35 mm DIN top-hat rail
- Dimensions (H x W x D): 105 x 23 x 111 mm ASi-INspektor®
- Dimensions (H x W x D: 105 x 23 x 111 mm ASi-INspektor® with Switch and Pure-box
- Industrial protection: IP20
- Ambient temperature: 0 °C to 55 °C
- Storage temperature: -25 °C to 85 °C

Scope of delivery StarterKIT

- ASi-INspektor®
- M12 cable to ASi-BUS
- ASiMA (ASi measuring adapter M12)
- Patch cable
- Switch for ASi-INspektor®
- Pure-box to provide the ASi-INspektor® web interface
- User manual

Ordering details	Art. No.
ASi-INspektor®	124040000
StarterKIT ASi-INspektor®	124040001
Active measuring point ASiMA IP67	120040000
M12 connection cable	120010003
Ethernet patch cable	124080003
Ethernet patch cable crossover	124080002

ASi-INspektor® with web interface (StarterKIT)

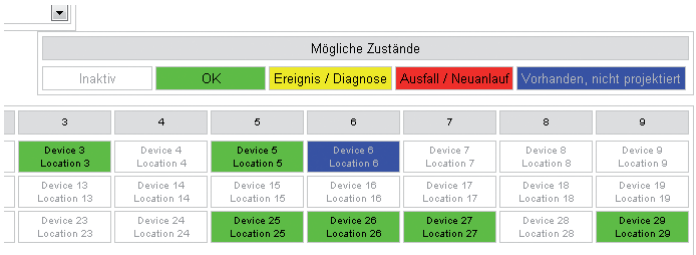

Device list ASi-INspektor®

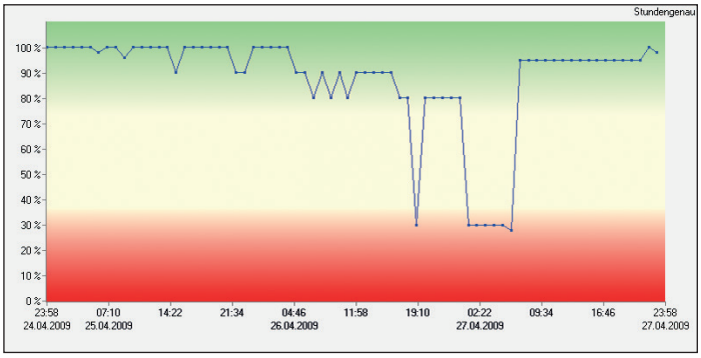

Network status ASi in PROmanage® NT

EMV INspektor® V2

Function

The increasing power density of the industrial production results in a higher risk of interference currents along the cables, on the conducting paths of the power supply and those of the potential equalization systems. The diagnostic tool EMV-INspektor® V2 allows an automated, contactless and uninterrupted test and detects electromagnetic disturbances temporarily. Up to four current transformers can be connected to the device. The measurement values are recorded separately, evaluated and compared.

EMC disturbances are measured along the fieldbus cable via the 24 VDC power supply, via the 230/400 VAC low-voltage distribution system, in the equipotential bonding system and via the transmitter lines.

Application

- Parallel inspections of multiple potentially disturbed sections
- Comparison of the data from input source components
- Specific condition evaluation and alerting
- Visual illustration of the disturbance values via web interface
- Export of the measurement data to a USB memory or via LAN interface
- Configuration of the device software via web interface

Measuring range

- AC current: 10 mAto 60 A

Measurement approaches

- EMC interferences along the BUS cables
- EMC interferences via the V 24 VDC power supply
- EMC interferences via the 230/400 VAC lowvoltage distribution system
- EMC interferences in the equipotential bonding system
- EMC interferences via the transmitter lines

EMV-INspektor® V2

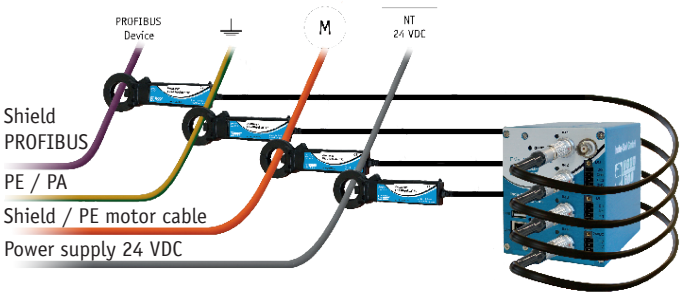

Application

Web interface

Ordering details	Art. No.
EMV-INspektor® V2	122010001

Network management software PROmanage® NT

Function

PROmanage® NT makes it possible for you to analyze and evaluate information on the condition of fieldbus systems and industrial networks and store it on the long haul. The information is transmitted to a central point to provide you an overview. Thus it is possible to get from this central software at any time information on the condition of the controlled fieldbus, incl. Ethernet. PROmanage® NT queries all port statistics of the manageable switches and the results of the decentralised data collector (INspektors®) at minute intervals to evaluates them and displays them graphically. With this sophisticated analytical technique irregularities can be detected immediately and adjustable thresholds trigger an alarm. Through this statistics function the data are available to the minute up to one year. Thus historic events, such as sporadic failures, can be tracked at any time and used for cause study.

Network data

The user interface is arranged so as to make it easy for the user to find information. It can be tailored to meet your needs and you can use two screens. The graphical display provides a comparison of several parameters and can handle several devices, e.g. you can correlate parameters such as device temperature and device failures of different devices so as to be able to identify the cause of disturbances.

Chronicle

The chronicle of the network provides rapid information which is easy to read on current network status, periods of time in which your network operates free of errors and point in time when disturbances occured (with time stamp).

Event messages

Integrated management of threshold values allows the user to specify the limiting values for network parameters. As soon as these threshold values are reached, an entry complete with time stamp is written automatically into the event log. Just one click is needed to retrieve network disturbances from the event log.

Alerting

The implemented alarm management System provides automated message forwarding. The user selects the desired medium (email, messaging services, OPC, SNMP) to transfer messages in a timely manner directly to the appropriate area of responsibility, thereby shortening action times and avoiding unnecessary plant breakdowns.

System requirements

Following operating systems are supported:
Microsoft® Windows® XP Professional 32 Bit
Microsoft® Windows® 7 32 Bit / 64 Bit
Microsoft® Windows® 8, 8.1 64 Bit
Microsoft® Windows® Server 2008 R2, 2012, 2012 R2

Depending on the number and extent of the attached devices apply to following system requirements:

Licence size	CPU	RAM	Hard disk drive space required
up to 160 Ports	Dual Core (Intel® Core™ i3)	2 GB	50 GB
up to 480 Ports	Dual Core, Quad Core (Intel® Core™ i3, i5)	4 GB	100 GB
up to 960 Ports	Quad Core (Intel® Core™ i5, i7, Intel® Xeon®)	8 GB	200 GB (Server HDD recommended)

Network management software PROmanage® NT

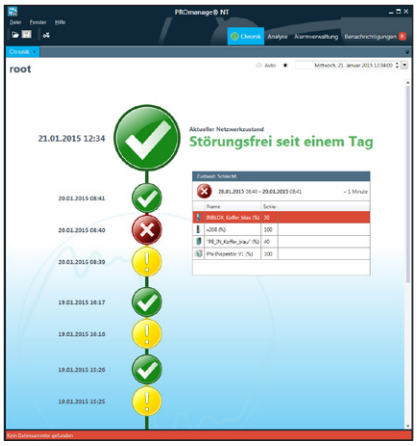

Chronik

Ordering details	Art. No.
PROmanage® NT 80 Ports *	**117000032**
PROmanage® NT 160 Ports *	**117000033**
PROmanage® NT 320 Ports*	**117000034**
PROmanage® NT 480 Ports *	**117000035**
PROmanage® NT 640 Ports *	**117000036**
Upgrade PROmanage® V23 to NT	**117000040**
OPC Server	**112010006**

Other licences on request.

* The licence defines the maximum number of network Ports or devices retrieved simultaneously. (Ethernet Switch: number of network port = number of licence port, 1 PN-INspektor® NT= 16 Ports, sonstiger INspektor® = 8 Ports)

Configuration example (Permanent network monitoring)

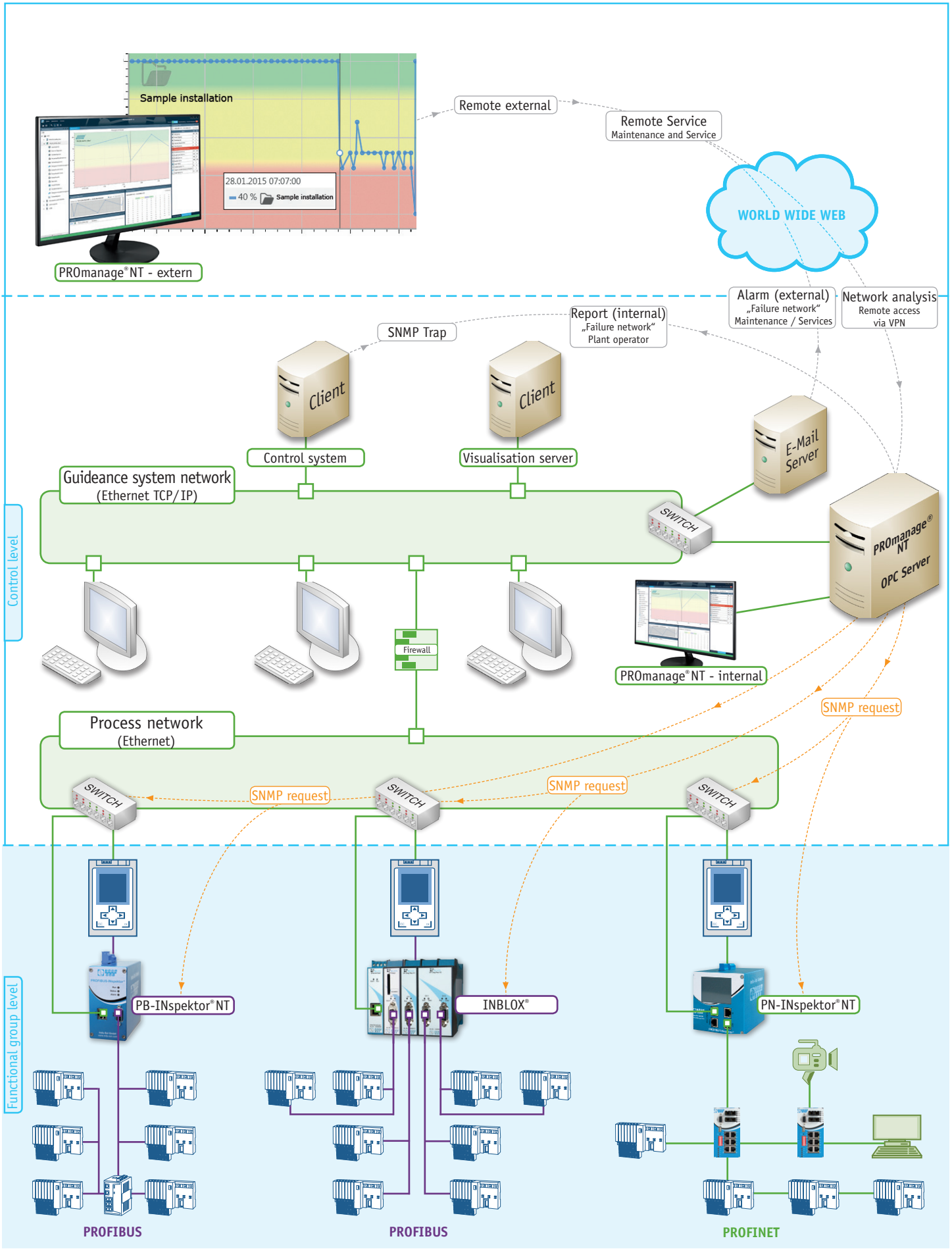

OPC Server - Field bus warning in the control system

Function

In connection with the network monitoring software PROmanage® NT the **OPC server** makes it possible to automatically integrate fieldbus warnings into a higher-level control system and thus fits the last link in the alarm chain up to the highest control level. Communication errors of fieldbus systems (PROFIBUS, PROFINET, CAN, ASi, Ethernet) are displayed on the control level in a timely manner thus warning the operator of imminent plant shutdowns. Information on the kind of fault can be gathered from the message received and web-based from PROmanage® NT.

Application

Through decentralized data collectors (INspektors® and switches) PROmanage® NT analyzes the fieldbus systems permanently for communication errors, such as error telegrams, telegram repetitions, device diagnoses and device failures. The collected data are analyzed by a threshold and alarm management and as soon a set trigger has been activated an entry is made in the signal/alarm list.
The OPC server gets permanent access to the signal/alarm list and transmits the content of this list after a preceding inquiry by the control system, the OPC client. The messages are then further processed by the control system which can be freely configured by the end user depending on its needs.

General data

- High-performance OPC server
- Configurable as Windows service
- Configuration can be changed to running time
- OPC DataAccess 1.0a, 2.0, 2.05a, 3.0, DDE
- Communication according to Ethernet and serial interfaces (modem)
- Detailed logging, configurable
- Operation system: Windows 2000, Server2003, XP, Vista, Server 2008

Scope of delivery

- Software
- Manual

Ordering details	Art. No.
OPC Server	112010006

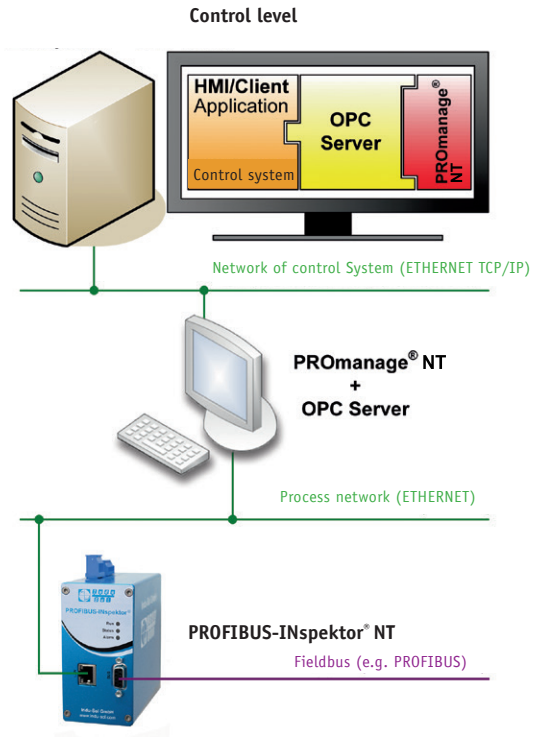

OPC scheme with field level -
PROmanage® NT - OPC Server - OPC Client (PROmanage® NT)

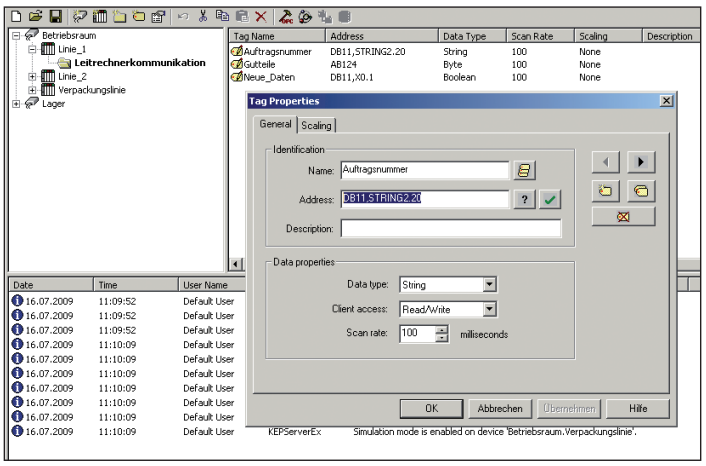

Configuration interface OPC Server

Infrastructure components PROFIBUS DP/PA

Measuring points **49**

Active measuring point PBMA IP20 49
Intelligent measuring point iPBMA IP20 50
Active measuring point PBMB IP20 51
Active measuring point PAMA IP20 52
Active measuring point PBMX IP67 53
Active measuring point PBMS IP64 54
Retrofit Kit PBMF PB Interface electronics 55
Measuring point PAMA IP67 56

Active cables **57**

Active programming cable APKA 57
Active programming Cable APKA II 58
Active stub line ASTL 59

Connector **60**

Connector overview 60
Diagnostic connector PG/90° screw terminal 61
Connector PG/90° screw terminal 62
Connector PG/35° screw terminal 63
SConnector axial screw terminal 64
Diagnostic connector PG/90° Fast Connect 65
Diagnostic connector PG/45° Fast Connect 66
Diagnostic connector axial Fast Connect 67
Connector PG/90° Fast Connect 68
PB connector with PG 90° standard 69
M12 circular connector FC Plug PRO self-made up (B-coded) 70
M12 terminator socket (B coded) 71

Repeater **72**

Built-in repeater DLP30 72
INBLOX® Modular Diagnosis Repeater 73
INBLOX® DP Basic Rep 74
INBLOX® Ethernet head module 75
INBLOX® DP Diag+ Rep 76
INBLOX® Extension Module Diag Rep X1 77
INBLOX® Extension module Diag Rep X2 78
INBLOX® Extension module Diag Rep X4 79
INBLOX® Alarm module 80
MULTIrep family - The compact multiple repeater 81
Compact repeater REpeato 82
Repeater IP67 MR (rough conditions) 83

BLUambas® PROFIBUS **84**

Cables and accessories **85**

PROFIBUS cable solid 85
PROFIBUS cable flexible 86
PROFIBUS cable drag chain capable 87
PROFIBUS cable +FE solid 88
PROFIBUS cable +FE flexible 89
M12 Bus termination (B coded) IP67 90
Control cabinet bushing M12 (B coded) 91
T piece M12 92
T piece M12 compact 93
T piece M12 (PROFIBUS PA) 94
Active stub line "ASTL" MIYATCHI 95

Active measuring point PBMA IP20

Function

For the purpose of physical determination of the signal-to-noise ratio of the PROFIBUS communication non-interacting measuring points are required in every segment of a master system. These measuring points should be accessible during operation. To get optimal information on the physical transmission quality, the measuring points have to be provided at the two ends of a segment.
The PBMA type meets not only the requirements of a non-interacting measuring point but also fulfils the requirements and the function of an active bus termination. The Power LED signals the 24 V power supply required for the terminating resistor.
Diagnostic tools are connected according to the PG / diagnosis interface of the PROFIBUS connector. For a non-interacting connection of a programming device (laptop / field PG) the use of an active programming cable APKA or APKA II is basically recommended.

Bus connection

- Connection according to IDC terminal for Fast Connect PROFIBUS line (Art. No.: 110080001)
- Connection according to screw terminal technique (Art. No.: 110080003)
- 90° cable outlet

Electrical parameters

- Baud rate: 9,6 kbps to 12 Mbps
- Input voltage: 24 VDC (20-28 V, pole-proof)
- Output voltage: 5 VDC / 200 mA short-circuit proof Pin 5 (GND) 6 (+)
- Current drain: Type 30 mA
- Voltage supply through screw terminals
- Integrated terminating resistor, switching according to a sliding switch of the connector from outside

The connection of functional earth is absolutely necessary for the functioning of the PROFIBUS shield!

Ambient conditions

- Operation temperature: 0 °C to +70 °C
- Protective system: IP20

Design

- Dimension (H x W x D): PBMA approx. 82 x 22,5 x 74 mm
  PBMB approx. 82 x 22,5 x 40 mm
- Weight: Approx. 116 g
- Casing: Active adapter (PBMB) of plastic materials
- Diagnostic plug Fast Connect: Zinc die casting
- Diagnostic plug screw terminal: Plastic materials metallised
- Fastening: Snapped on the DIN rail according to EN 50022

Ordering details	Art. No.
PBMA (PBMB + Diagnoseconnector Fast Connect)	**110080001**
PBMA (PBMB + Diagnoseconnector Screw terminal)	**110080003**
Diagnoseconnector PG/90° Fast Connect	**110050006**
Diagnoseconnector PG/90° Screw terminal	**110050009**

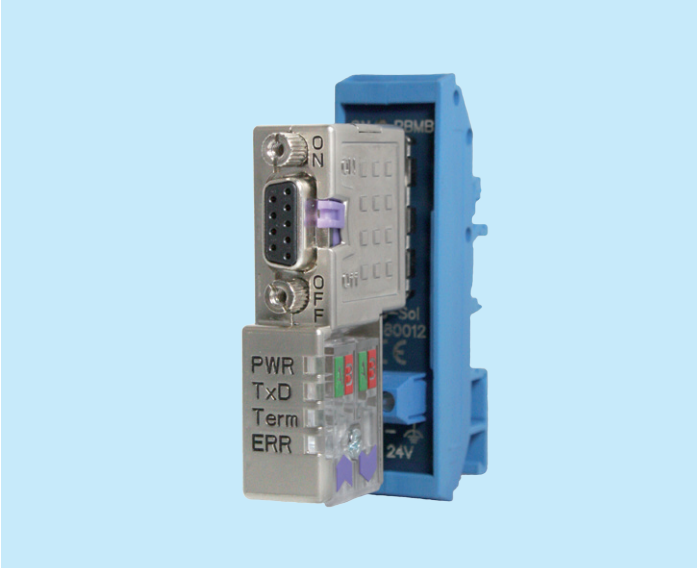

Active measuring point PBMA IP20 (incl. active adapter PBMB)

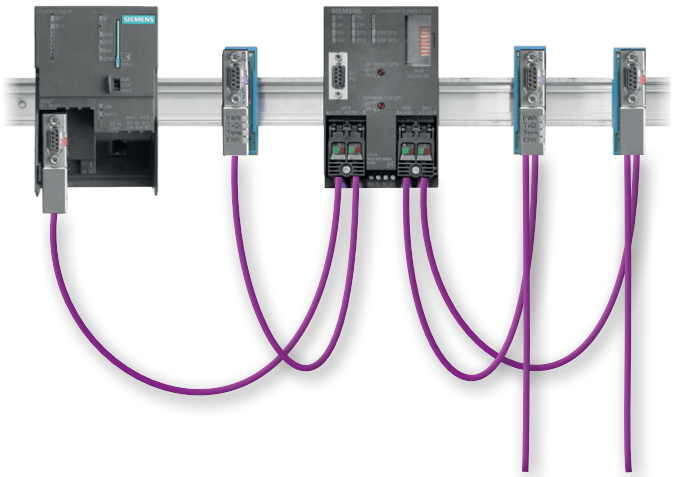

Example of use

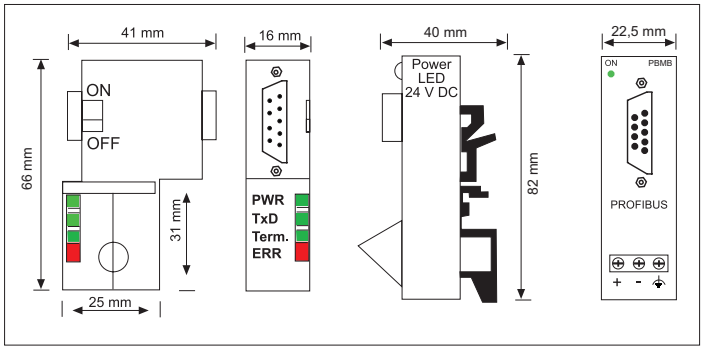

Engineering drawing

Intelligent measuring point iPBMA IP20

Function

The **intelligent PROFIBUS measuring point** detects logical errors in data communication and disturbances in signal transmission that are signaled by various light-emitting diodes. This simple analysis allows the network operator to detect communication deterioration early and take troubleshooting measures. To get optimal information on the physical transmission quality, the measuring points have to be provided at the two ends of a segment.

For the purpose of detailed analysis of PROFIBUS communication quality an additional sub-D socket is available for the use of appropriate diagnostic tools. For a non-interacting connection of a programming device (laptop / field PG) the use of an active programming cable APKA or APKA II is basically recommended. The **iPBMA** type meets not only the requirements of a non-interacting measuring point and an integrated diagnosis but also fulfils the requirements and the function of an active bus termination.

Bus connection

- Connection according to screw terminal technique
- Shield with strain relief
- 90° cable outlet
- Integrated terminating resistor, switching according to a sliding switch of the connector from outside
- Baud rate: 9,6 kbps to 12 Mbps

Technical data

- Input voltage: 24 VDC (20-28 V, pole-proof)
- Output voltage: 9-pin sub-D: 5 VDC / 200 mA short-circuit proof pin 5 (GND) and 6 (+)
- Current drain: Type 30 mA
- Voltage supply through screw terminals

The connection of functional earth is absolutely necessary for the functioning of the PROFIBUS shield!

General data

- Fastening: 35 mm DIN rail
- Dimension (H x W x D): 75 x 55 x 42 mm
- Protective system: IP20
- Operation temperature: 0 °C to +70 °C
- Weight: 100 g
- Casing: Aluminum housing with plastic copings

Ordering details	Art. No.
iPBMA	110080015

Intelligent measuring point iPBMA IP20

Designation	Status	Description
Power	ON	Correct voltage supply
	OFF	Voltage supply error
Data	Flashing	Bus communication available
	OFF	No bus communication
Termination	ON	Internal termination active
	Flashing	Termination error
	OFF	Internal termination inactive
Bus Quality	ON	Error-free bus communication
	ON	Low signal level
	ON	Data communication error

Designation Status Description

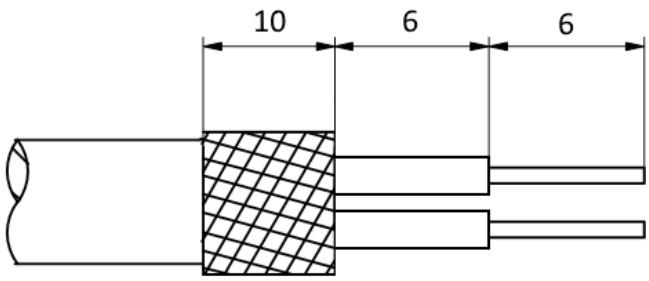

iPBMA PROFIBUS connection

Active adapter PBMB IP20

Function

For the purpose of physical determination of the signal-to-noise ratio of the PROFIBUS communication non-interacting measuring points are required in every segment of a master system. To get optimal information on the physical transmission quality, the measuring points have to be provided at the two ends of a segment.

For connecting of a PROFIBUS line it is necessary to add a PROFIBUS connector (see Active measuring point PBMA) to the PBMB.

As type PBMA it meets not only the requirements of a non-interacting measuring point but also fulfils the requirements and the function of an active bus termination. The Power LED signals the 24 V power supply required for the terminating resistor.

Diagnostic tools are connected according to the PG / diagnosis interface of the PROFIBUS connector. For a non-interacting connection of a programming device (laptop / field PG) the use of an active programming cable APKA or APKA II is basically recommended.

Electrical parameters

- Baud rate: 9,6 kbps to 12 Mbps
- Input voltage: 24 VDC (20-28 V, pole-proof)
- Output voltage: 5 VDC / 200 mA short-circuit proof Pin 5 (GND) 6 (+)
- Current drain: Type 30 mA (incl. diagnostic connector)
- Voltage supply through screw terminals

The connection of functional earth is absolutely necessary for the functioning of the PROFIBUS shield!

Ambient conditions

- Operation temperature: 0 °C to +70 °C
- Protective system: IP20

Design

- Dimensions (H x W x D): Approx. 82 x 22,5 x 40 mm
- Weight: Approx. 33 g
- Casing: Active adapter of plastic materials
- Fasting: Snapped on the DIN rail according to EN 50022

Ordering details	Art. No.
PBMB IP20 (Active adapter)	**110080012**

Active adapter PBMB IP20

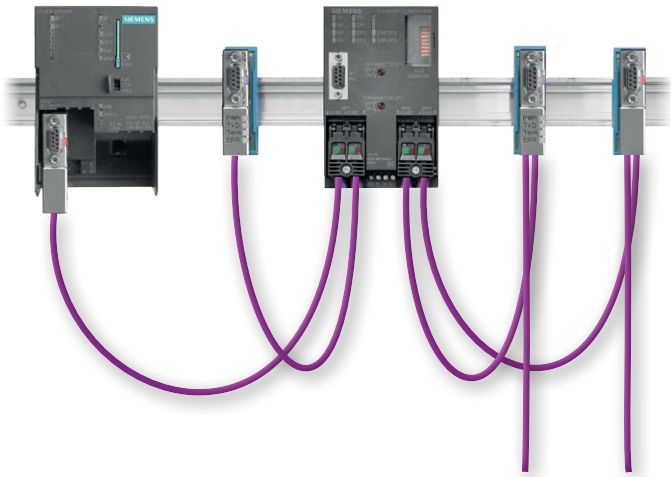

Example of use

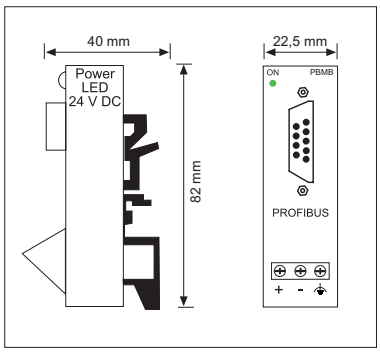

Engineering drawing

Measuring point PAMA IP20

Function

The passive **PAMA IP20** PROFIBUS measurement point can be installed to evaluate the PROFIBUS PA communication. To do this, it provides two access points for the connection of PA measurement instruments during running operation.

The DM-AM Kit multitester is connected via the Measurement Point Signal Quality input to the PA master system by means of a measuring adapter. This allows for both physical and logical analysis of the PROFIBUS PA communication. The DM-AM Kit multitester is a comprehensive measuring device for the PA PROFIBUS and is perfectly suitable for both commissioning and quick fault analysis and remedy.

The actual PA current is measured at the Supply Current Measurement Point by means of a DC meter in combination with a multimeter. This facilitates a nonreactive analysis of all system-relevant parameters during running operation.

For integration into the PA system wiring, the PAMA IP20 is connected to the PA IN and PA OUT sockets.

Environmental conditions

- Operating temperature: 0 °C to +70 °C
- Protection class: IP20

Design

- Dimensions (H x W x D): Ca. 75 x 55 x 65 mm
- Weight: Ca. 33 g
- Housing: Measuring point made of aluminium and plastic
- Mount: Snaps on to DIN rail EN 50022

Ordering details	Art. No.
PAMA IP20	110080016
DM-AM-Kit	110010002

Measuring point PAMA IP20

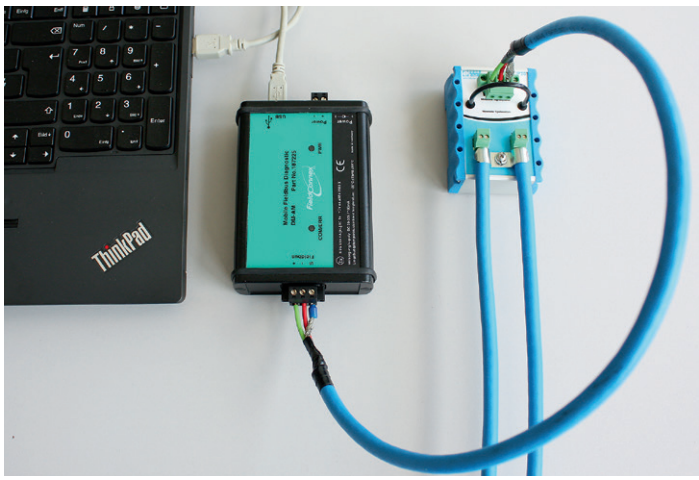

Connection universal tester „DM-AM-Kit“

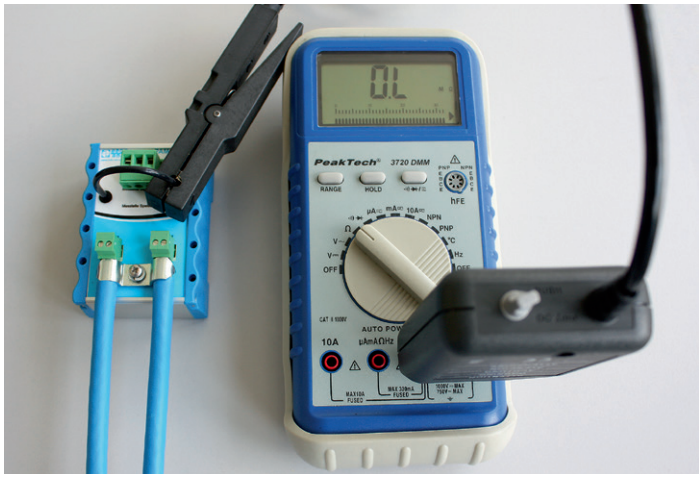

Connection direct current measuring device with multimeter

Active measuring point PBMX IP67

Function

For the purpose of physical determination of the signal-to-noise ratio of the PROFIBUS communication feedback-free measuring points are required in every segment of a master system. To get optimal information on the physical transfer quality, the measuring points have to be provided at the two ends of a segment
As PBMX type with the protective system IP 67 it can be used without protective casing in a rough production environment. The PBMX meets not only the requirements of a feedback-free measuring point but also fulfils the requirements and the function respectively of an active bus termination.
The 24V connection ensures the 5 V voltage supply for the terminating resistor according to an internal DC/DC transformer.
The diagnostic tools are connected according to the free M 12 measuring socket.

Bus connection

- Power: M12 - Connection D (A-coded, dowel)
- Bus: M12 - Connection A (B-coded, dowel) - „incoming“
  M12 - Connection C (B-codiert, socket) - „outgoing“
- PG / Diagnosis: M12 - Connection B (B-coded, socket)

Electrical parameters

- Baud rate: 9,6 kbps to 12 Mbps
- Rated voltage: 24 VDC
- Rated current: Pin 2 / 4 0,25 A
  Pin 1 / 3 / 5 2,00 A
- Input voltage: 24 VDC (18 to 30 VDC, pole-proof)
- Output voltage: 5 VDC (100 mA) Pin 1/3
  (5 V tapping at sockets B and C)

Ambient conditions

- Temperature range: -20 °C to +80 °C
- Industrial protection: IP67
- Degree of pollution: 3

Design

- Casing: nickel-plated zinc die cast
- Input / Output: EMV electromechanical screw-joint
- Outlet: M12 plug-and-socket connector
- Number of contacts: 5 gilt copper
- Weight: approx. 210 g
- Fastening: M5 x 1 bolt (thread at the back)

Ordering details	Art. No.
PBMX-Set	**110080005**

The PBMX-Set compromises (ready-to-install items):

1 x active measuring adapter PBMX (bus termination)
1 x power cable M12 (female), standard length 3 m
1 x unilaterally converted PROFIBUS cable (female) 2 m
1 x M12 bus temination (male)
1 x M12 blind closure

PBMX-Single	**110080004**
Mounting panel for direct fixing for PBMX	**110090017**

Active measuring point PBMX IP67

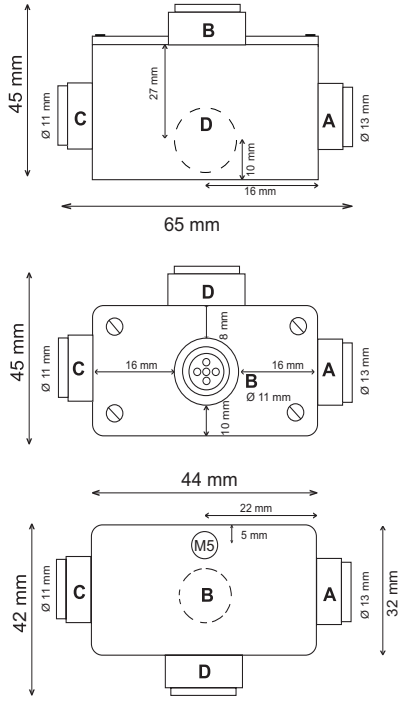

Engineering drawing

A	Bus "coming"		1: not used 2: A-Line (green) 3: not used 4: B-Line (red) 5: shield
B	diagnostic and programmer interface		1: 5 V 2: A-Line (green) 3: 0 V 4: B-Line (red) 5: shield
C	Bus "going"		
D	Power (24 V DC)		1: 24 V (brown) 2: not used 3: 0 V (bue) 4: not used 5: not used

Pin assignment

Active measuring point PBMS IP64

Function

The measuring and programming interface PBMS for front mounting in the control cabinets and terminal boxes provides for a simple and optimal access to the internal MPI or PROFIBUS interface. The integrated electronic system allows a feedback-free plugging of PROFIBUS analyzers while the system is running. To get an optimal anderstanding of the physical transfer quality, it is necessary to arrange the measuring points at the two ends of a segment. The PROFIBUS connector located on the rear side (inside the cabinet) meets the requirements and fulfils the function of an active bus termination. The diagnostic tool is connected according to the 9-pin sub-D PG / diagnosis interface at the front ander the cover. Depending on requirements the USB or RJ 45 type can be requested, too. For a feedback-free connection of a programming device (laptop / field PG) to the sub-D socket an active programming cable APKA is basically recommended.
The type PBMS-D (double) has a main socket-outlet next to the measuring socket. The socket is available in different versions depending on the local standard.

Bus connection

The connection to the PROFIBUS is executed through a commercially available PROFIBUS plug including a terminating resistor that can be switched on.

Electrical parameters

- Baud rate: 9,6 kbps to 12 Mbps
- Input voltage: 24 VDC (18 to 30 V, pole-proof)
- Output voltage: 5 VDC / 100 mA; short-circuit proof
  Pin 5 (GND); Pin 6 (+5V)
- Connections fed through screw-type terminals

Electrical parameters - Socket outlet

• Norm:	D VDE	USA NEMA	F UTE
• Rated voltage (max.):	250 V AC	125 V AC	250 V AC
• Frequency:	50 Hz	60 Hz	50 Hz
• Rated current (max.):	16 A	15 A	16 A

- Further on request

Ambient conditions

- Industrial protection: IP64

Design

- Dimensions (H x W x D): PBMS-E 115 x 65 x 38 mm (single)
  PBMS-D 115 x 130 x 78 mm (double)
- Weight: PBMS-E = 340 g
  PBMS-D = 800 g
- Frame: metal
- Cap: metal, black coat

Ordering details	Art. No.
PBMS-E black (single)	110080008
PBMS-D black (double, with german socket)	110080009
PBMS-B black international (double)	110080010
PBMF PB interface electronics (retrofit kit)	110080007

PBMS

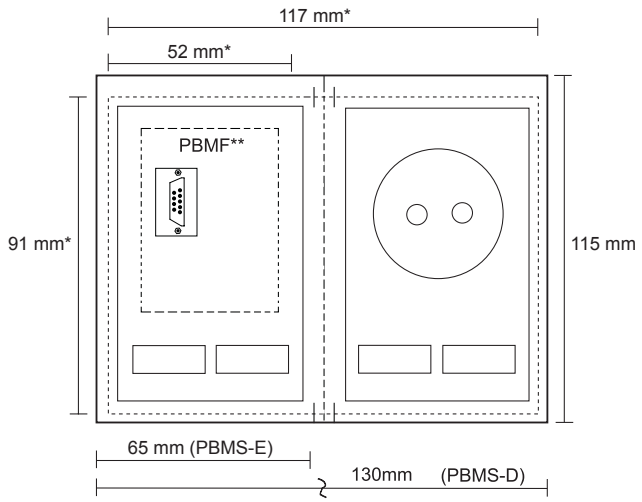

*) size matches section
**) electronic PBMF connection back-mounted

Engineering drawing

The local type of socket must be indicated separately in the order (PBMS black „International“):

e.g.

USA

Great Britain

France

To avoid reflections, we recommend to connect PG / PC devices alway according to active programming cables APKA.

Accessories

Active programming cable APKA	**110040000**
Active programming cable APKA II	**110040001**

Retrofit Kit PBMF PB Interface electronics

Function

The **retrofit kit PBMF** is the electronic unit of the measuring and programming interface PBMS IP64 - active termination. This kit must always be installed with a specially developed metal frame for use in control cabinets and terminal boxes.
By this electronic unit the requirements of a feedback-free measuring point and the requirements and function resp. concerning an active bus termination are met.
The connection to the PROFIBUS DP/MPI on the rear side is rendered by a commercially available PROFIBUS connector with a selectable terminating resistor. The diagnostic tools are connected according to the 9-pole sub-D socket.

For the feedback-free connection of a programming cable (laptop / field PG) to the sub-D receptacle an active programming APKA is basically recommended.

Bus connection

The connection to the PROFIBUS is rendered through a commercially available PROFIBUS connector with selectable terminating resistor.

Electrical parameters

- Baud rate: 9,6 kbps to 12 Mbps
- Input voltage: 24 VDC (18 to 30 V, pole-proof)
- Output voltage: 5 VDC / 100 mA short-circuit proof
  Pin 5 (GND); Pin 6 (+5V)
- Connection: screw terminal

Design

- Dimensions (H x W x D): 89 x 50 x 27 mm
- Weight: 48 g

PBMF – front view

PBMF – back view

Ordering details	Art. No.
Retrofit Kit PBMF PB interface electronics	**110080007**

To avoid reflections, we recommend to connect PG / PC devices alway according to active programming cables APKA

Accessories

Active programming cable APKA	**110040000**
Active programming cable APKA II	**110040001**

Measuring point PAMA IP67

Function

A physical determination of the signal-to-interference ratio of the PROFIBUS PA communication requires for each segment of a master system non-reactive measuring points. The PAMA variant meets the requirements of a non-reactive measuring point. The diagnostic tool is connected according to the M12 connector of the measuring point.

Electrical parameters

- Baud rate: 31,25 kbps
- Connection: insulation displacement connector technology
- Shock stress: 30 g / 11 ms
- Vibration stress: 10 to 58 Hz, 0,075 mm Amplitude

Ambient conditions

- Temperature range: -40 °C to +85 °C
- Protective system: IP67 (Only if all outlets are correctly loaded)

Design

- Dimensions (H x W x D): 56,5 x 85 x 62 mm
- Weight: 169 g
- Casing: PBT with 10 % GF + 10 % CF
- Measuring point: M12 - socket as measuring point
- Fastening: By clip on DIN rail or on the wall

Measuring point PAMA IP67

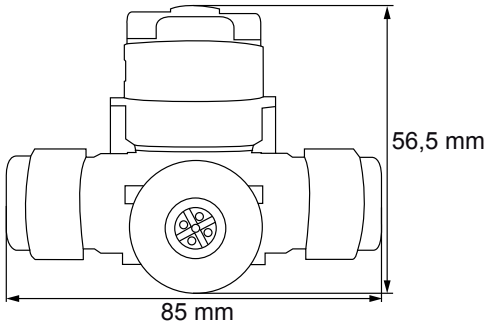

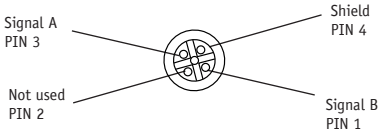

Pin 1: Signal B
Pin 2: Not used
Pin 3: Signal A
Pin 4: Shield

Engineering drawing

Ordering details	Art. No.
Measuring point PAMA IP67	110080011

Active programming cable APKA

Function

By the repeater integrated in the plug, the active programming cable APKA facilitates a reactionless plugging on the PROFIBUS to program and check the logic communication quality. The 5 V supply required for repeater operation shall be made available through the pin 5 (GND) and the pin 6 (+5 V) of the contacted 9-pin sub-D socket. It can be basically assumed that all slaves of the PROFIBUS norms support the relevant pin assignment.

Application instruction

The connector X1 with repeater function has to be plugged on the PROFIBUS and MPI interface respectively.
Important:
The active programming cable can not be used for connecting a bus user through a stub line. For this purpose the active stub line ASTL is to be used.

Connection

- 9-pin sub-D plug with integrated repeater (cable outlet 70°)
- 9-pin sub-D plug (axial cable outlet)

Electrical parameters

- Baud rate: 9,6 kbps to 12 Mbps
- Supply voltage: 4.75 - 5.25 VDC has to be provided by each PROFIBUS user (Pin 5 GND, Pin 6 +5V)

Design

- Weight: Approx. 230 g
- Length: 3 m
- Operating temperature: 0°C to 60°C
- Transport and storage temperatur: -25°C to 75°C
- Industrial protection: IP20

Pin assignment

Connector X1, connection measuring (repeater function)

Pin	Function	Note
1	not used	
2	M24	connects to X2 Pin 2
3	B	RS 485 data
4	RTS - AS	connects to X2 Pin 4
5	GND	connects to X2 Pin 5
6	VCC	supply voltage +5V
7	P24	connects to X2 Pin 7
8	A	RS 485 data reversed
9	not used	

Connector X2, connection slave

Pin	Function	Note
1	not used	
2	M24	connects to X1 Pin 2
3	B	RS 485 data
4	RTS - AS	connects to X2 Pin 4
5	GND	connects to X1 Pin 5
6	not used	
7	P24	connects to X1 Pin 7
8	A	RS 485 data reversed
9	RTS - RG	used for switching between send / receive

Active programming cable APKA

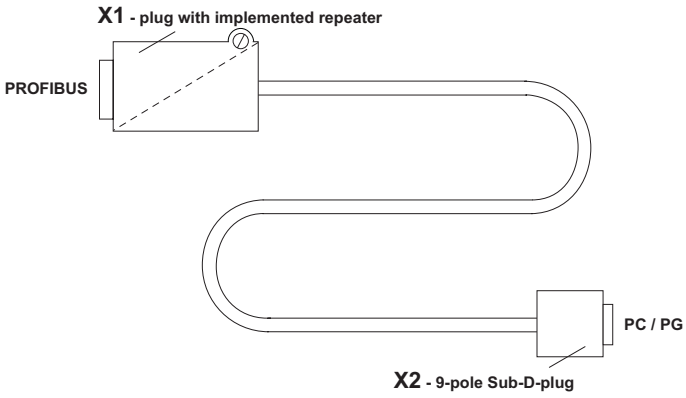

Engineering drawing

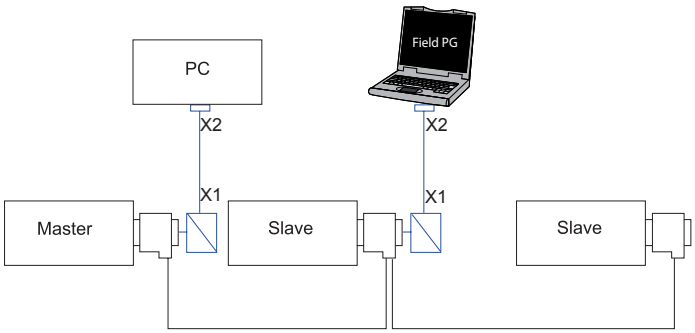

Example of use

Ordering details	Art. No.
Active programming cable APKA	110040000

Active programming cable APKA II

Function

By the repeater integrated in the plug, the active programming cable APKA II faciliates a reactionless plugging on the PROFIBUS to programm and check the logic communication quality. The 5 V supply required for repeater operation shall be made available through the pin 5 (GND) and the pin 6 (+5 V) of the contacted 9-pin sub-D socket. It can be basically assumed that all the slaves of the PROFIBUS norms support the relevant pin assignment.

Application instruction

The connector X1 with repeater function has to be plugged on the PROFIBUS and MPI interface respectively.
Important: The active programming cable cannot be used for connecting a bus user through a stub line. For this purpose the stub line ASTL is to be used.

Connection

- 9-pin sub-D plug with inplemented repeater (cable outlet 35°)
- 9-pin sub-D plug (axial cable outlet)

Electrical parameters

- Baud rate: 9,6 kbps to 12 Mbps
- Supply voltage: 4,75 to 5,25 VDC has to be provided by each PROFIBUS user (Pin 5 GND, Pin 6 +5V)

Design

- Weight: approx. 230 g
- Length: 3 m
- Operating temperature: 0°C to 60°C
- Transport and storage temperatur: -25°C to 75°C
- Industrial protection: IP20

Pin assignment

Connector X1, connection measuring (repeater function)

Pin	Function	Note
1	not used	
2	M24	connects to X2 Pin 2
3	B	RS 485 data
4	RTS - AS	connects to X2 Pin 4
5	GND	connects to X2 Pin 5
6	not used	
7	P24	connects to X2 Pin 7
8	A	RS 485 data reversed
9	not used	

Connector X2, connection slave

Pin	Function	Note
1	not used	
2	M24	connects to X1 Pin 2
3	B	RS 485 data
4	RTS - AS	connects to X1 Pin 4
5	GND	connects to X1 Pin 5
6	VCC	supply voltage +5 V
7	P24	connects to X1 Pin 7
8	A	RS 485 data reversed
9	RTS - RG	used for switching between send/receive

Active programming cable APKA II

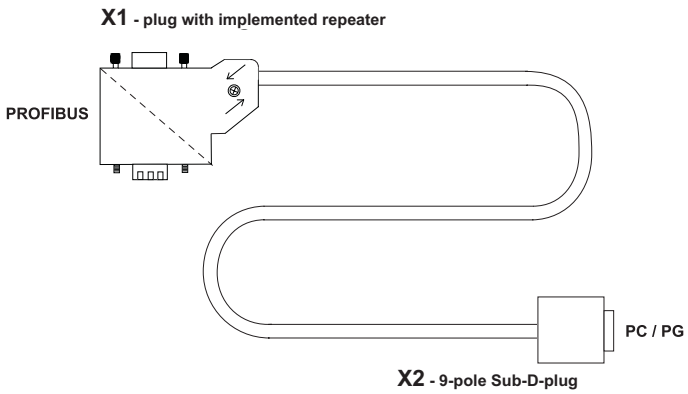

Engineering drawing

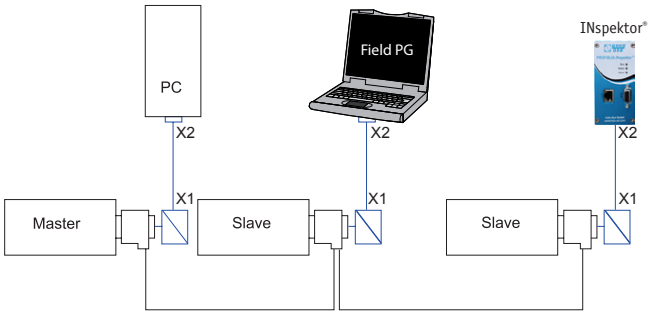

Example of use

Ordering details	Art. No.
Ative programming cable APKA II	110040001

Active stub line ASTL

Function

The ASTL allows the feedback-free connection of a device as an active stub line. This is possible because of the integrated repeater function in the connector. The 5 V supply required for repeater operation shall be made available through the pin 5 (GND) and the pin 6 (+5 V) of the contacted 9-pin sub-D socket. It can be basically assumed that all slaves of the PROFIBUS norms support the relevant pin assignment. It can be basically assumed that all slaves of the PROFIBUS norms support the relevant pin assignment.

Connection

- 9-pin sub-D plug with integrated repeater (X1 cable outlet axial)
- 9-pin sub-D plug (X2 outlet axial 35°)

Electrical parameters

- Baud rate: 9,6 kbps to 12 Mbps
- Supply voltage: 4.75 to 5.25 VDC has to be provided by each PROFIBUS user (Pin 5 GND, Pin 6 +5V)

Konstruktiver Aufbau

- Weight: Approx. 290 g
- Length: 3 m and 10 m

Ambient conditions

- Operating temperature: 0 °C to +60 °C
- Transport / storage temperature: -20 °C to +60 °C
- Industrial protection: P20
- Relative humidity: max. 75 % (non-condensing)

Pin assignment

Connector X1, connection measuring (repeater function)

Pin	Function	Note
1	not used	
2	M24	connects to X2 Pin 2
3	B	RS 485 data
4	not used	
5	GND	connects to X2 Pin 5
6	VCC	supply voltage +5V
7	P24	connects to X2 Pin 7
8	A	RS 485 data reversed
9	not used	

Connector X2, connection slave

Pin	Function	Note
1	not used	
2	M24	connects to X1 Pin 2
3	B	RS 485 data
4	RTS - AS	directional control from slave
5	GND	connects to X1 Pin 5
6	not used	
7	P24	connects to X1 Pin 7
8	A	RS 485 data reversed
9	not used	

Ordering details	Art. No.
Active stub line ASTL	110040005

Active stub line ASTL

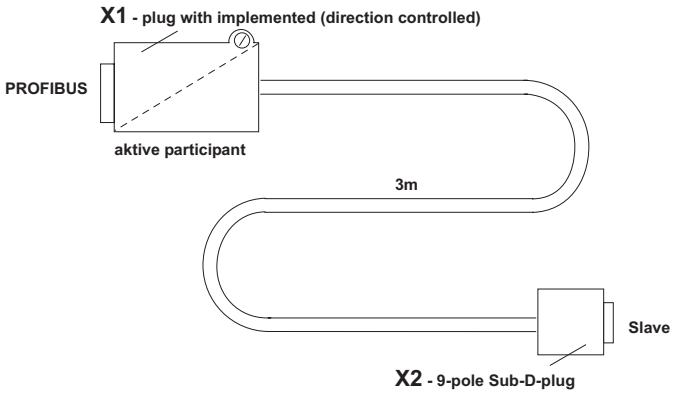

Engineering drawing

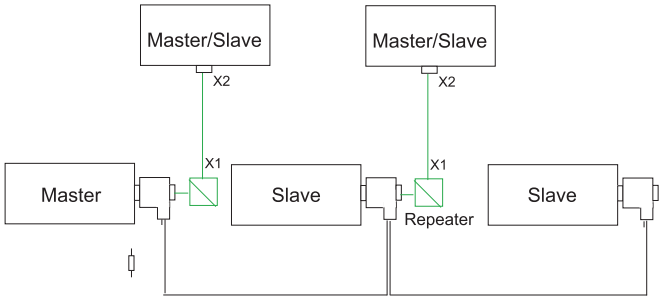

Example of use

PROFIBUS connector overview

Termination technique	Orientation	with PG	Product image	Art. No.	Catalogue page
Screw terminal	Diagnostic 90°	✓		110050009	61
	90°	✗		110050001	62
	90°	✓		110050002	62
	35°	✗		110050003	63
	35°	✓		110050004	63
	axial	✗		110050005	64
Fast Connect	Diagnostic 90°	✓		110050006	66
	Diagnostic 45°	✓		110050007	66
	Diagnostic axial	✗		110050008	67
	90°	✓		110050010	69
M12	self-made-up (B-coded)	✗		110050024 110050025	70
	terminator socket	✗		110050019	70

Diagnostic connector PG/90° screw terminal

Function

The PG/Service interface serves as feedback-free measuring point for measurements with PROFtest II XL/PROFI-TM Professional and PB-INspektor® NT can also be used as programming interface. The plug is completely shielded by the metal-coated casing. The plug for the terminating resistor that is accessible from outside, disconnects the outgoing segment when being in ON position.
The integrated three LEDs are used for the quick diagnosis of the bus status.

Bus connection

- 9-pin sub-D interface
- Screw terminal connection
- 90° cable outlet

Electrical parameters

- Terminating resistor: integrated, can be switched with a sliding switch from outside
- Baud rate: 9.6 kbps to 12 Mbps
- Supply voltage: 4.75 to 5.25 VDC has to be provided by each PROFIBUS user (Pin 5 GND, Pin 6 +5V)
- Current drain: 35 mA
- Diagnostic display through LED status

Ambient conditions

- Operating temperature: -25°C to +85°C
- Transport / storage temperature: -25°C to +85°C
- Relative humidity: max. 75 % at a temperature of +25 °C
- Industrial protection: IP20

Design

- Dimensions (H x W x D): 64 x 17 x 40 mm
- Interface: 9-pin sub-D
- Weight: approx. 40 g
- Casing: plastic materials metallized

Status display for diagnostic function

Switch ON/OFF	PWR Green	TxD Green	Term Green	ERR Yellow	Description
x	•	x	x	x	Power is OK (+5V ±5%)
x	☼	x	x	x	Power is out of (+5V ±5%)
x	☼	x	x	☼	Short-circuit of bus wire possible
X	X	○	X	X	No bus activity of participant
X	X	☼	X	X	Bus activity of participant
X	X	•	X	X	Bus activity, RTS (pin 4) of RS485 is not connected
OFF	X	X	○	X	Termination is switched off
OFF	X	X	☼	X	Internal terminating resistor faulty
ON	X	X	•	X	Termination is activated
X	X	X	X	○	No errors detected
OFF	X	☼	○	•	Bus is not terminated
OFF	X	○	○	•	Bus is open

ON: • OFF: ○ flashing (5Hz): ☼ extraneous: x

Ordering details	Art. No.
Diagnostic connector PG/90° screw terminal	110050009

Diagnostic connector PG/90° screw terminal

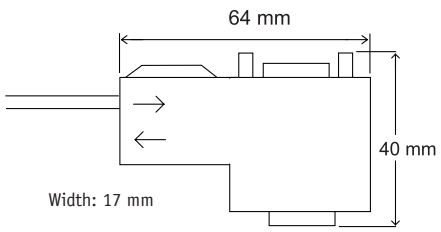

Engineering drawing

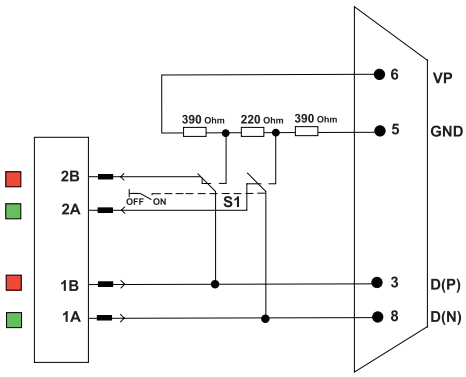

Functional diagram

Connector PG/90° Screw terminal

Function

The PG/Service interface serves as feedback-free measuring point for measurements with PROFtest II XL/PROFI-TM Professional and PB-INspektor® NT can also be used as programming interface. The plug is completely shielded by the metal-coated casing.
The plug for the terminating resistor that is accessible from outside, disconnects the outgoing segment when being in ON position. When using the screw terminal all commercially available line types can be connected, so the plug can be used variously.

Bus connection

- 9-pin sub-D interface
- Screw terminal connection
- 90° cable outlet

Electrical parameters

- Terminating resistor: integrated, can be switched with a sliding switch from outside
- Baud rate: 9.6 kbps to 12 Mbps
- Supply voltage: 4.75 to 5.25 VDC has to be provided by each PROFIBUS user (Pin 5 GND, Pin 6 +5V)
- Current drain: 12,5 mA

Ambient conditions

- Operating temperature: -25°C bis +85°C
- Transport / storage temperature:: -25°C to +85°C
- Relative humidity: Max. 75 %, bei +25 °C
- Industrial protection: IP20

Design

- Dimensions (H x W x D): 64 x 17 x 40 mm
- Interface: 9-pin sub-D
- Weight: approx. 40 g
- Casing: plastic material metallized

CE mark

Plugs are passive components and are not subject to the CE mark system pursuant to EU Directives.

Connector PG/90° Screw terminal

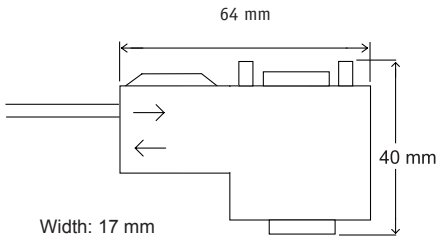

Engineering drawing

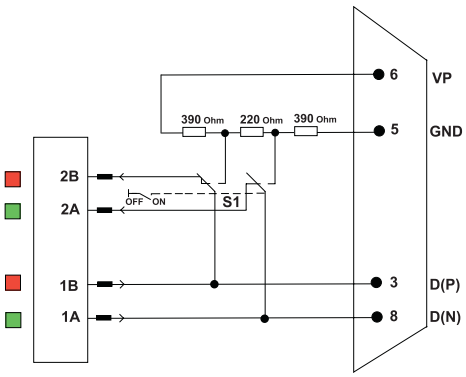

Functional diagram

Ordering details	Art. No.
Connector without PG/90° Screw terminal	110050001
Connector PG/90° Screw terminal	110050002

Connector PG/35° Screw terminal

Function

The PG/Service interface serves as feedback-free measuring point for measurements with PROFtest II XL/PROFI-TM Professional and PB-INspektor® NT can also be used as programming interface. The plug is completely shielded by the metal-coated casing.
The plug for the terminating resistor that is accessible from outside, disconnects the outgoing segment when being in ON position. When using the screw terminal all commercially available line types can be connected, so the plug can be used variously.

Bus connection

- 9-pin sub-D interface
- Screw terminal connection
- 35° cable outlet

Electrical parameters

- Terminating resistor: integrated, can be switched with a sliding switch from outside
- Baud rate: 9.6 kbps to 12 Mbps
- Supply voltage: 4.75 to 5.25 VDC has to be provided by each PROFIBUS user (Pin 5 GND, Pin 6 +5V)

Ambient conditions

- Operating temperature: -25 °C bis +85 °C
- Transport / storage temperature: -25 °C to +85 °C
- Relative humidity: max. 75 % at a temperature of +25 °C
- Industrial protection: IP20

Design

- Dimensions (H x W x D): 54 x 17 x 40 mm
- Interface: 9-pin sub-D
- Weight: approx. 35 g
- Casing: plastic material metallized

CE mark

Plugs are passive components and are not subject to the CE mark system pursuant to EU Directives.

Connector PG/35° Screw terminal

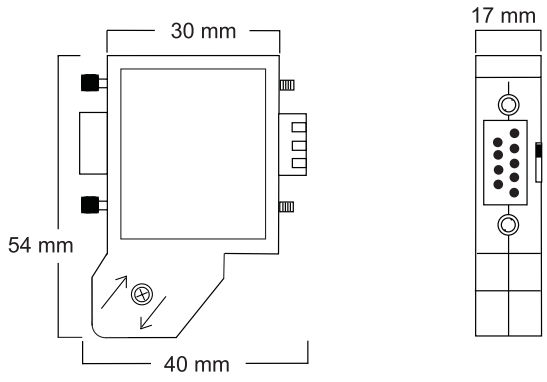

Engineering drawing

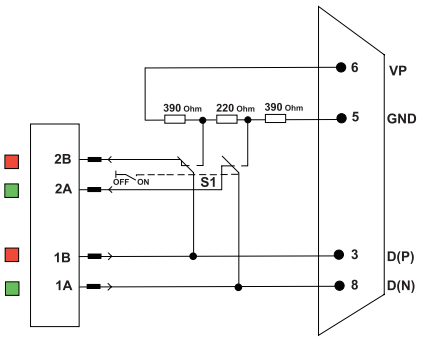

Functional diagram

Ordering details	Art. No.
Connector without PG/35° Screw terminal	110050003
Connector PG/35° Screw terminal	110050004

Connector axial Screw terminal

Function

The axial fieldbus connector is used to connect a PROFIBUS device with a PROFIBUS line. The plug is shielded by a metal housing.
The plug for the terminating resistor that is accessible from outside, disconnects the outgoing segment when being in ON position. When using the screw terminal all commercially available line types can be connected.

Bus connection

- 9-pin sub-D interface
- Screw terminal connection
- Axial cable outlet

Electrical parameters

- Terminating resistor: integrated, can be switched with a sliding switch from outside
- Baud rate: 9.6 kbps to 12 Mbps
- Supply voltage: 4.75 to 5.25 VDC has to be provided by each PROFIBUS user (Pin 5 GND, Pin 6 +5V)
- Current drain: 12,5 mA

Ambient conditions

- Operating temperature: -25 °C to +85 °C
- Transport / storage temperature: -25 °C to +85 °C
- Relative humidity: max. 75 % at a temperature of +25 °C
- Industrial protection: IP20

Design

- Dimensions (H x W x D): 41 x 17 x 67 mm
- Interface: 9-pin sub-D
- Weight: approx. 30 g
- Casing: plastic material metallized

CE mark

Plugs are passive components and are not subject to the CE mark system pursuant to EU Directives.

Connector axial Screw terminal

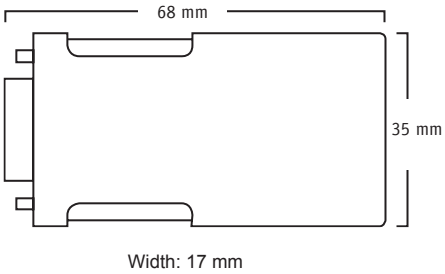

Engineering drawing

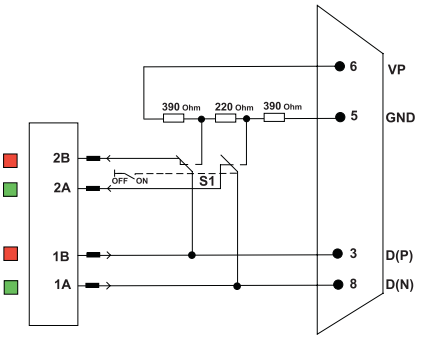

Functional diagram

Ordering details	Art. No.
Connector axial Screw terminal	110050005

Diagnostic connector PG/90° Fast Connect

Function

The PG/Service interface serves as feedback-free measuring point for measurements with PROFtest II XL/PROFI-TM Professional and PB-INspektor® NT can also be used as programming interface. The plug is completely shielded by the metal-coated casing. The plug for the terminating resistor that is accessible from outside, disconnects the outgoing segment when being in ON position. The design meets the Fast Connect requirement.
The integrated 4 LEDs (Power, TxD, Termination, Error) allow a quick diagnosis of the bus status. With the Error LED, for example reflections and missing terminating resistors are signalled.

Bus connection

- 9-pin sub-D interface
- Insulation piercing terminal (suitable for Fast Connect cable)
- 90° cable outlet

Electrical parameters

- Terminating resistor: integrated, can be switched with a sliding switch from outside
- Baud rate: 9.6 kbps to 12 Mbps
- Supply voltage: 4.75 to 5.25 VDC has to be provided by each PROFIBUS user (Pin 5 GND, Pin 6 +5V)
- Current drain: 10 ... 30 mA
- Diagnostic display through LED status

Ambient conditions

- Operating temperature: -20 °C to +75 °C
- Industrial protection: IP20

Design

- Dimensions (H x W x D): 66 x 15,8 x 40 mm
- Interface: 9-pin sub-D
- Weight: approx. 80 g
- Casing: zinc die cast
- Max. fastening torque: 0,02 Nm

Status display for diagnostic function

Switch ON/OFF	PWR Green	TxD Green	Term Green	ERR Yellow	Description
x	•	x	x	x	Power is OK (+5V ±5%)
x	☼	x	x	x	Power is out of (+5V ±5%)
x	☼	x	x	☼	Short-circuit of bus wire possible
X	X	○	X	X	No bus activity of participant
X	X	☼	X	X	Bus activity of participant
X	X	•	X	X	Bus activity, RTS (pin 4) of RS485 is not connected
OFF	X	X	○	X	Termination is switched off
OFF	X	X	☼	X	Internal terminating resistor faulty
ON	X	X	•	X	Termination is activated
X	X	X	X	○	No errors detected
OFF	X	☼	○	•	Bus is not terminated
OFF	X	○	○	•	Bus is open

ON: • OFF: ○ flashing (5Hz): ☼ extraneous: x

CE mark

Plugs are passive components and are subject to the CE mark system pursuant to EU Directives.

Diagnostic connector PG/90° Fast Connect

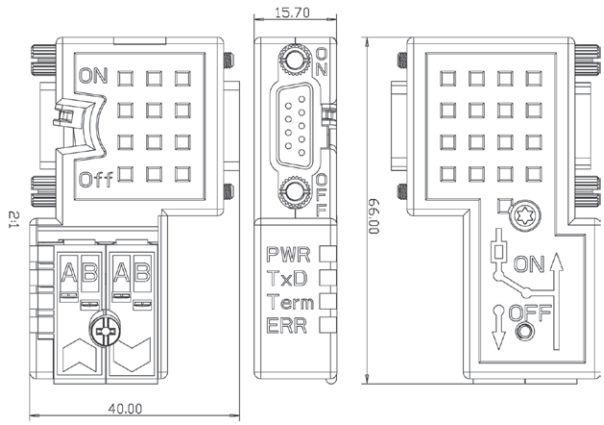

Engineering drawing

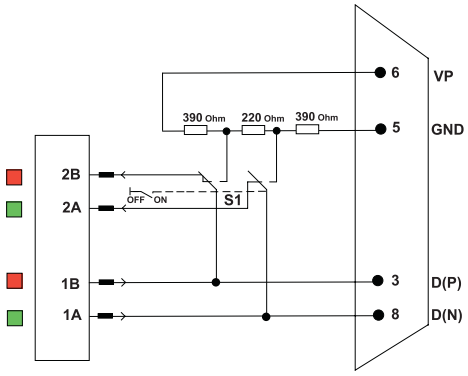

Functional diagram

Ordering details	Art. No.
Diagnostic connector PG/90° Fast Connect	110050006

Diagnostic connector PG/45° Fast Connect

Function

The PG/Service interface serves as feedback-free measuring point for measurements with PROFtest II XL/PROFI-TM Professional and PB-INspektor® NT can also be used as programming interface. The plug is completely shielded by the metal-coated casing.
The plug for the terminating resistor that is accessible from outside, disconnects the outgoing segment when being in ON position.
The design meets the Fast Connect requirement.
The integrated 4 LEDs (Power, TxD, Termination, Error) serve for a quick diagnosis of the bus status. With the Error LED, for example reflections and missing terminating resistors are signalled.
Because of the very space-saving routing of the PROFIBUS line (45° cable outlet) this connector can also be used in densely structured control cabinets.

Bus connection

- 9-pin sub-D interface
- Insulation piercing terminal (suitable for Fast Connect cable)
- 45° cable outlet

Electrical parameters

- Terminating resistor: integrated, can be switched with a sliding switch from outside
- Baud rate: 9.6 kbps to 12 Mbps
- Supply voltage: 4.75 to 5.25 VDC has to be provided by each PROFIBUS user (Pin 5 GND, Pin 6 +5V)
- Current drain: 10 ... 30 mA
- Diagnostic display through LED status

Ambient conditions

- Operating temperature: -20 °C to +75 °C
- Industrial protection: IP20

Design

- Dimensions (H x W x D): 61 x 15,8 x 53 mm
- Interface: 9-pin sub-D
- Weight: approx. 80 g
- Casing: zinc die cast
- Max. fastening torque: 0,02 Nm

Status display for diagnostic function

Switch ON/OFF	PWR Green	TxD Green	Term Green	ERR Yellow	Description
x	•	x	x	x	Power is OK (+5V ±5%)
x	☼	x	x	x	Power is out of (+5V ±5%)
x	☼	x	x	☼	Short-circuit of bus wire possible
X	X	○	X	X	No bus activity of participant
X	X	☼	X	X	Bus activity of participant
X	X	•	X	X	Bus activity, RTS (pin 4) of RS485 is not connected
OFF	X	X	○	X	Termination is switched off
OFF	X	X	☼	X	Internal terminating resistor faulty
ON	X	X	•	X	Termination is activated
X	X	X	X	○	No errors detected
OFF	X	☼	○	•	Bus is not terminated
OFF	X	○	○	•	Bus is open

ON: • OFF: flashing (5Hz): extraneous: x

Diagnostic connector PG/45° Fast Connect

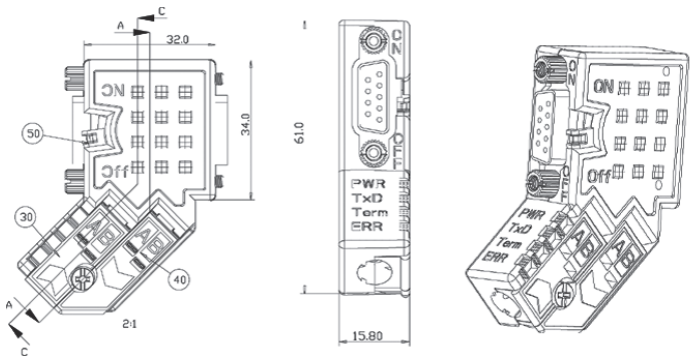

Engineering drawing

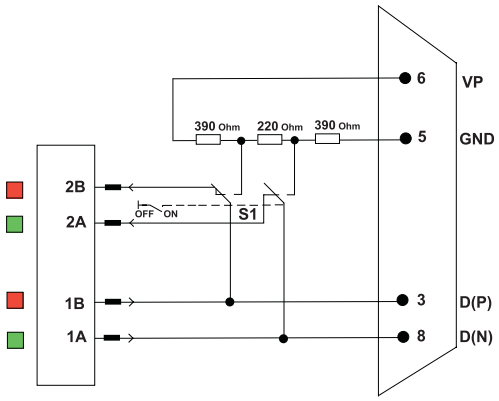

Functional diagram

CE mark

Plugs are passive components and are subject to the CE mark system pursuant to EU Directives.

Ordering details	Art. No.
Diagnostic connector PG/45° Fast Connect	110050007

Diagnostic connector axial Fast Connect

Function

The PG/Service interface serves as feedback-free measuring point for measurements with PROFtest II XL/PROFI-TM Professional and PB-INspektor® NT can also be used as programming interface. The plug is completely shielded by the metal-coated casing.
The plug for the terminating resistor is accessible from outside, disconnects the outgoing segment when being in ON position. The integrated 4 LEDs (Power, TxD, Termination, Error) serve for a quick diagnosis of the bus status. With the Error LED, for example reflections and missing terminating resistors are signalled. The design meets the Fast Connect requirement.

Bus connection

- 9-pin sub-D interface
- Insulation piercing terminal (suitable for Fast Connect cable)
- Axial cable outlet

Electrical parameters

- Terminating resistor: integrated, can be switched with a sliding switch from outside
- Baud rate: 9.6 kbps to 12 Mbps
- Supply voltage: 4.75 to 5.25 VDC has to be provided by each PROFIBUS user (Pin 5 GND, Pin 6 +5V)
- Current drain: 10 ... 30 mA
- Diagnostic display through LED status

Ambient conditions

- Operating temperature: -20 °C to +75 °C
- Industrial protection: IP20

Design

- Dimensions (H x W x D): 34 x 15,8 x 64 mm
- Interface: 9-pin sub-D
- Weight: approx. 80 g
- Casing: zinc die cast
- Max. fastening torque: 0,02 Nm

Status display for diagnostic function

Switch ON/OFF	PWR Green	TxD Green	Term Green	ERR Yellow	Description
x	•	x	x	x	Power is OK (+5V ±5%)
x	☼	x	x	x	Power is out of (+5V ±5%)
x	☼	x	x	☼	Short-circuit of bus wire possible
X	X	○	X	X	No bus activity of participant
X	X	☼	X	X	Bus activity of participant
X	X	•	X	X	Bus activity, RTS (pin 4) of RS485 is not connected
OFF	X	X	○	X	Termination is switched off
OFF	X	X	☼	X	Internal terminating resistor faulty
ON	X	X	•	X	Termination is activated
X	X	X	X	○	No errors detected
OFF	X	☼	○	•	Bus is not terminated
OFF	X	○	○	•	Bus is open

ON: • OFF: ○ flashing (5Hz): ☼ extraneous: x

CE mark

Plugs are passive components and are subject to the CE mark system pursuant to EU Directives.

Diagnostic connector axial Fast Connect

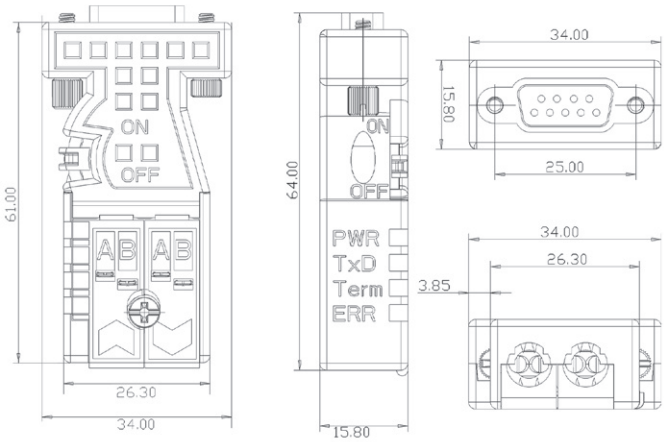

Engineering drawing

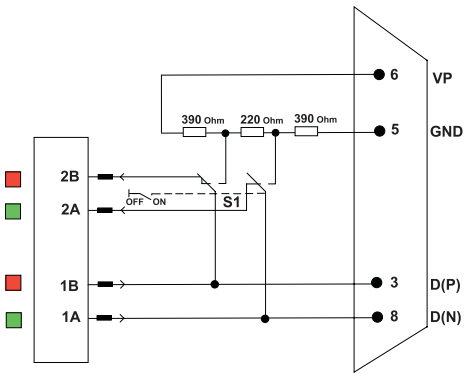

Functional diagram

Ordering details	Art. No.
Diagnostic connector axial Fast Connect	110050008

Connector PG/90° Fast Connect

Function

The PG/Service interface serves as feedback-free measuring point for measurements with PROFtest II XL/PROFI-TM Professional and PB-INspektor® NT can also be used as programming interface. The plug is completely shielded by the metal-coated casing. The design meets the Fast Connect requirement.
The plug for the terminating resistor that is accessible from outside, disconnects the outgoing segment when being in ON position. The design meets the Fast Connect requirement.

Bus connection

- 9-pin sub-D interface
- Insulation piercing terminal (suitable for „Fast Connect“ cable)
- 90° cable outlet

Electrical parameters

- Terminating resistor: integrated, can be switched with a sliding switch from outside
- Baud rate: 9.6 kbps to 12 Mbps
- Supply voltage: 4.75 to 5.25 VDC has to be provided by each PROFIBUS user (Pin 5 GND, Pin 6 +5V)
- Current drain: 12,5 mA

Ambient conditions

- Operating temperature: -20 °C to +75 °C
- Transport / storage temperature: -25 °C to +80 °C
- Industrial protection: IP20

Design

- Dimensions (H x W x D): 65 x 16 x 41 mm
- Interface: 9-pin sub-D
- Weight: approx. 80 g
- Casing: zinc die cast

CE mark

Plugs are passive components and are subject to the CE mark system pursuant to EU Directives.

Ordering details	Art. No.
Connector PG/90° Fast Connect	110050010

Connector PG/90° Fast Connect

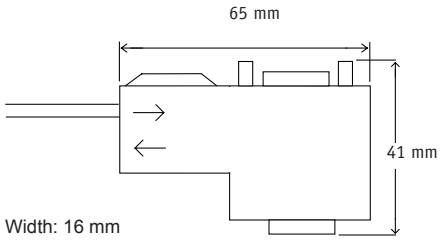

Engineering drawing

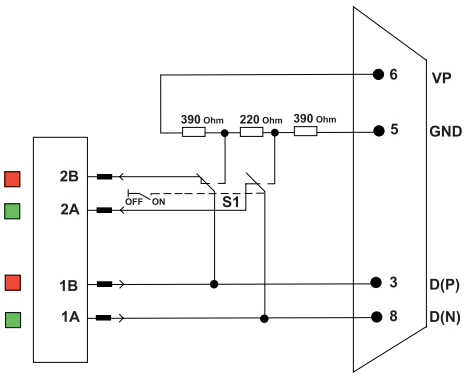

Functional diagram

PB-Stecker interne Kabelkl. mit PG 90° Standard

Function

Die PG-/Service-Schnittstelle dient als rückwirkungsfreie Messstelle bei laufender Produktion für Messungen mit PROFtest II / PROFI-TM Professional/PB-INspektor® NT und kann darüber hinaus auch als Programmierschnittstelle verwendet werden. Der Stecker ist durch das Zinndruckguss-Gehäuse komplett geschirmt. Der von außen zugängliche Schalter für den Abschlusswiderstand trennt bei der Stellung „ON“ das abgehende Segment.

Technische Merkmale

- Komplett geschirmtes Zinkdruckguss-Gehäuse für EMI/RFI-Sicherheit
- Kabelausgang: Compact: 90° zur D-Sub Steckrichtung
- Massiver Schalterhebel extern bedienbar zur Aktivierung der Bus-Terminierung
- Programmier- /Diagnoseoption mit 2tem D-Sub
- Verriegelung: Rändelschraube UNC 4-40

Technical data

- Datenrate: Max. 12 MBit/s
- Steckverbinder und Pinbelegung gemäß Profibus Spezifikation
- Profibus DP Schnittstelle: D-Sub, 9polig, Stift
- Profibus DP PG Schnittstelle: 9polig, Buchse/D-Sub
- Profibus Kabel-Schnittstelle: Direkter Kabelanschluss
- Einzelader: Käfigzugfederklemme farbig: A grün; B rot
- Einzeladerquerschnitt: 0,08 -0,5 mm² (AWG 28 - AWG 20)
- Schirmanschluss: Interne Schirmklemme
- Kabeldurchmesser: 8 - 9 mm
- Busabschluss: Busabschluss-Widerstände über extern bedienbaren Schalter aktivierbar
- Mechanische Lebensdauer: Min 200 Steckzyklen
- Temperaturbereich: - 20° C bis 70° C
- Zulässige Feuchtigkeit: Max. 75 % bei +25 °C, nicht kondensierend
- Schutzart: IP 30
- Gehäusewerkstoff: Zinn-Legierung
- D-Sub Schraubverriegelung: UNC 4-40

Bestellangaben	Art.-Nr.
PB-Stecker interne Kabelkl. mit PG 90° Standard	110050013

PB-Stecker interne Kabelkl. mit PG 90° Standard

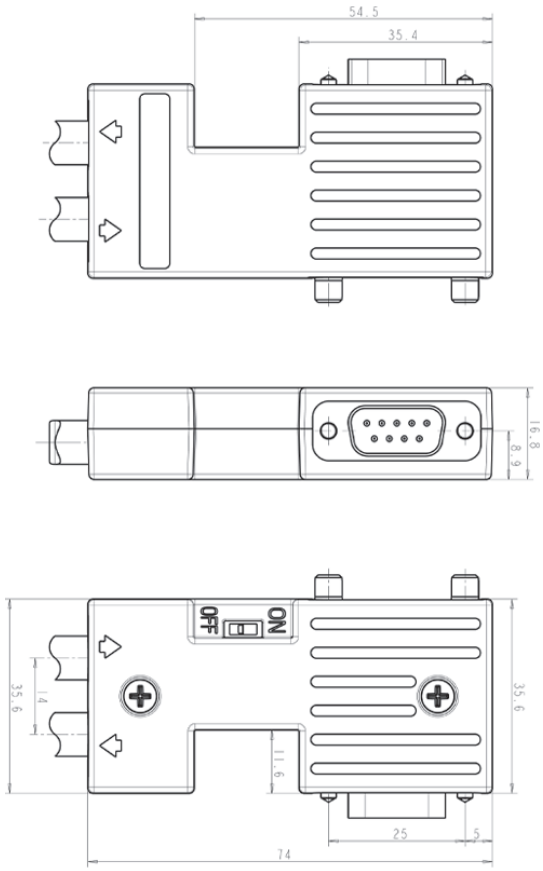

Technische Zeichnung

M12 Circular connector FC Plug PRO self-made up (B-coded)

Application / Installation

PROFIBUS machine installation without control cabinets in protection type IP65/67 demand compact sturdy M12 plug connectors. The PROFIBUS Fast Connect M12 Plugs (B-coded) ensure simple, fast and reliable installation due to their integral insulation-piercing design.
The 4-pole design with integral large surface area shield contacting via the metal housing means full compliance with the current specification of the PNO (PROFIBUS user organisation) installation guidelines.

The PROFIBUS Fast Connect Stripping Tool to prepare the end of the cable (strip the sheath and shield on the cable in one operation) ensures easy handling and fast, error-free contacting of the cable on the plug connectors. Since the plug connectors consist of just two housing parts, they can be assembled easily even in difficult conditions. The side handling surfaces allow the use of an open-ended spanner and make screwing the plug halves easy during the finishing operation.

Bus connection

- M12 (B-coded)
- Fast Connect
- Axial outgoing cable
- Transfer speed: 9.6 kbps to 12 Mbps

Electrical values

- Rated current / Contact: 4 A (IEC 60512- 3)
- Rated voltage / Contact: 30 VAC, 36 VDC (VDC 0110)

Ambient conditions

- Operating temperature: -40°C to +85°C
- Protection type: IP65/67 when connected and screwed (DIN VDE 0470)

Constructive design

- Weight: Straight: 40 g
- Housing: Metal
- Dimensions (WxHxD): 19 x 19 x 73 mm
- Contact surface: Brass alloy (CuSnZn)
- Connection cross-section: max. 0.75 mm²

CE mark / UL approval

Plugs are passive components and are not subject to the CE mark system pursuant to EU Directives.

The M12 round plug connector FC Plug PRO (B-coded) is a coordinated system of PROFIBUS Fast Connect plug connectors and an extensive range of Fast Connect cables with the appropriate UL approvals.

Ordering details	Art. No.
M12 round plug connector FC Plug PRO (B-coded) connector	**110050024**
M12 round plug connector FC Plug PRO (B-coded) socket	**110050025**

M12 round plug connector FC Plug PRO (B-coded)

Sample application (side view)

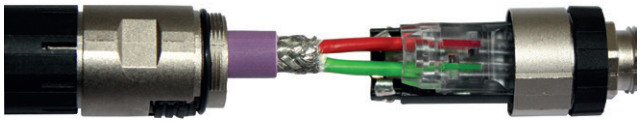

Sample application (view from above)

M12 x 1 pin

M12 x 1 socket

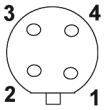

Pin 1: Not used
Pin 2: A cable (green)
Pin 3: Not used
Pin 4: B cable (red)

Pin assignment

M12 terminator socket (B-coded)

Function

In PROFIBUS networks require the bus termination with termination resotors accoeding to the PROFIBUS specificatin for the first bus participant on the input side and for the last bus participant on the output side. One solution, even under harsh conditions, for PROFIBUS components with M12 interfaces is the socket-type M12 terminator for the cable outlet.
Shielding and a safe use even under rough conditions are ensured by an impact- and shock-resistant all-metal housing.

Bus connection

- M12 (B-coded)

Electrical parameters

- Current rating: 4 A
- Operation voltage: 24 VDC

Ambient conditions

- Temperature range: -25 °C to +85 °C
- Industrial protection: IP67 (EN 60529)

Design

- Dimensions (Length x cross-section): 53,2 mm x 16 mm²
- Materials: Zinc die casting, matt nickel-plated
- Torque: 0,6 Nm
- Verriegelung der Steckplätze: Screw thread M12 × 1 mm self-locking

CE mark

Plugs are passive components and are not subject to the CE mark system pursuant to EU Directives.

M12 terminator socket (B-coded)

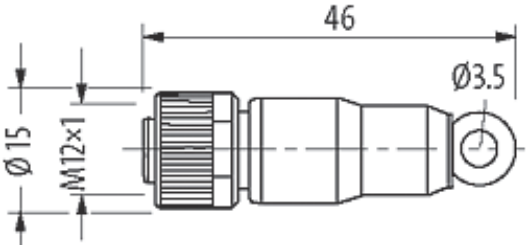

Engineering drawing

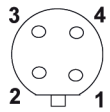

Pin 1: Not used
Pin 2: A cable (green)
Pin 3: Not used
Pin 4: B cable (red)
Pin 5: Not used

Pin assignment

Ordering details	Art. No.
M12 terminator socket (B-coded)	110050019

Built-in repeater DLP30

Function

The built-in repeater DLP30 is a RS 485 repeater for feedback-free connection of a PROFIBUS slave as an active spur.
The main field of application of this product is instrument manufacture. It may happen that the internal PROFIBUS interfacing has to be installed at a certain distance from the PROFIBUS module location proper. Often the connection is rendered through a line section which from a length of >10 cm as passive spur line has a negative impact on the data communication quality.
If several of these devices are in one segment, the lengths of the internal spurs must be added together.
Although according to PNO the sum of spur lines in the PROFIBUS of 6.6 m is admissible with a Baud rate of up to 1.5 Mbps, passive spur lines of any length should not be used for the sake of a long-term, safe and reliable data communication.

Installation recommendation

The external PROFIBUS connection is rendered through a relevant casing cut-out for a 9-pin sub-D connector. Should an additional mechanical protection be needed, a suitable guard plate can be provided.

Bus connection

- 9-pin standard PROFIBUS connector
- The slave is connected via a 10-pin ribbon cable.
- Total length 20 m must not be exceeded.
- A shielded type is recommended from a length of 0.3 m.
- The internal connecting cable is not included in the scope of supply.

Upon request delivery/assembly will be customized (line lengths and connector design).

Electrical parameters

- +5 V and RTS signal must be available at slave
- Baud rate: 9.6 kbps to 12 Mbps

Ambient conditions

- Operating temperature: 0 °C to +60 °C
- Transport / storage temperature: -20 °C to +60 °C
- Relative humidity: max. 75 % (non-condensing)
- Protective system: IP20

Testing

It is recommended to test the proper function after installation by measurements.

Ordering details	Art. No.
Build-in repeater DLP30	110030005

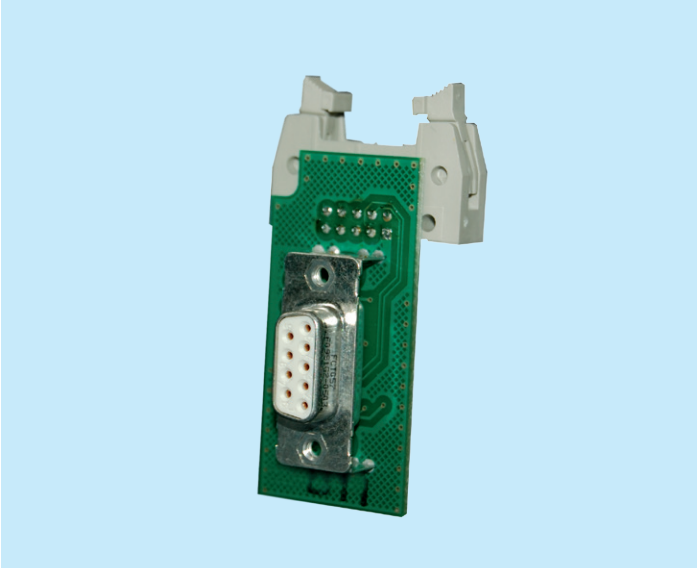

Built-in repeater DLP30

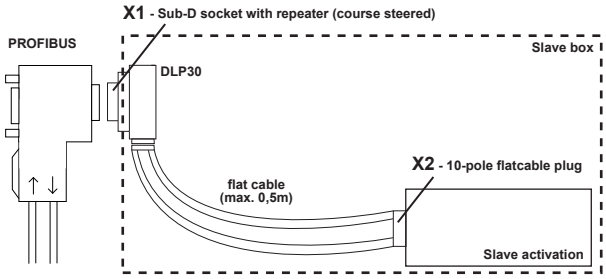

Engineering drawing

Connector X1 (sub-D), connection measuring (repeater function)

Pin	Function	Not
1	not used	
2	M24	connects to X2 Pin 3
3	B	RS-485 Daten
4	not used	
5	GND	connects to X2 Pin 9
6	VCC	supply voltage +5V
7	P24	connects to X2 Pin 4
8	A	RS-485 data reversed
9	not used	

Connector X2 (ribbon cable connector), connection slave

Pin	Function	Note
1	not used	
2	VCC	supply voltage +5V
3	M24	connects to X1 Pin 2
4	P24	connects to X1 Pin 7
5	B	RS-485 datan
6	A	RS-485 data reversed
7	RTS-AS	connects to X1 Pin 7
8	not used	
9	GND	connects to X2 Pin 5
10	not used	

Pin assignment

INBLOX® Modular Diagnosis Repeater

Function

The **Modular Diagnosis Repeater** of the INBLOX® series is based on a modular extensible repeater with up to maximally 25 isolated bus segments. In addition to the repeater function every bus outlet has a diagnostic function. Besides the known repeater function the bus diagnosis of all outlets is based on the logic and physical data traffic. The parameters in the form of firmly set triggers are repeat telegrams and restarts of devices or quality characteristics, edge steepness, level and glitches. Using the smart head module, E-head, these values can be set by the web interface and displayed as matrix.

Module combinations

Depending on the head module selected in combination with the individual extension modules you can opt between a logic and a physical diagnosis. For alarms you can choose based on the degree of intelligence, a simple LED, a floating contact through to a SNMP management solution.

There are two suggestions for combinations:

- **managed** (E head, DP Diag Rep, Diag+ Rep) and
- **unmanaged** (Basic Rep, DP Diag Rep)

These are examples of how to combine depending on the required level of comfort and degree of intelligence of the modules. All modules can be combined with each other in different variations depending on the requirement.

Why INBLOX®?

- The smart Modular Diagnosis Repeater is integrated in automation systems and is versatile thanks to its modularity.
- Depending on the user's requirements all modules can be combined in different variants.
- Depending on the head module selected alarms are given via a LED signal per segment or switching contact and email resp.

Ordering details	Art. No.
DP Basic Rep	124060007
INBLOX® Ethernet head module (E head)	124060000
INBLOX® Extension module DP Diag+ Rep	124060010
INBLOX® Extension module DP Diag Rep X1	124060013
INBLOX® Extension module DP Diag Rep X2	124060012
INBLOX® Extension module DP Diag Rep X4	124060009
INBLOX® alarm module	124060006

INBLOX® Modular diagnosis repeater

Declaration backplane bus

as modular INspektor®

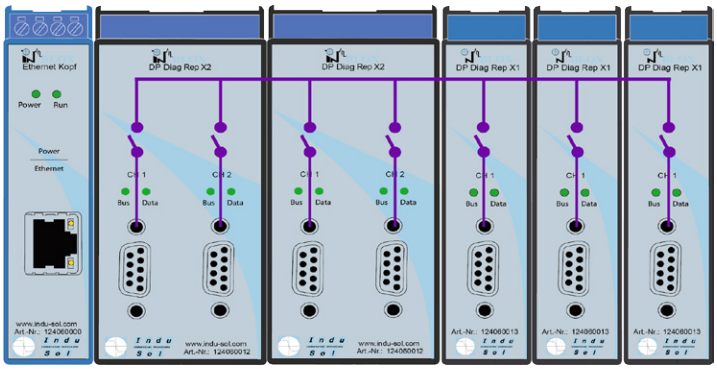

E head MS1 MS2 MS3 MS4 MS5

as repeater

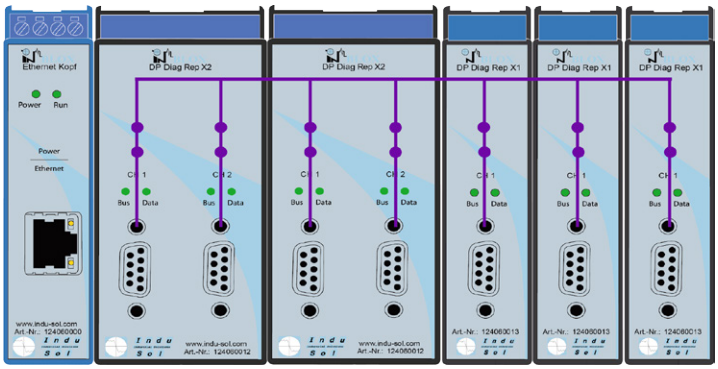

E head Seg1 Seg2 Seg3 Seg4 Seg5

INBLOX® DP Basic Rep

Function

The **DP Basic Rep** is the head module of a multiple repeater that can be extended by up to five extension modules. It has no higher intelligence and serves primarily as repeater with an extended diagnosis via LED.
The coming PROFIBUS has got a 9-pin D-subminiature connector. Four terminal connections provide for the PROFIBUS outlets and thus five segments can be built.
By the extension modules each having four segments it is possible to create up to 25 segments. The LEDs provide for a simple diagnosis.

Technical data

- Voltage supply: 24 VDC ± 20 %
- Power supply: 0,3 A
- Connection: 9 pole sub-D – IN
  4 screw terminals – OUT
  (Assignment: shield / B / A / shield)
- Baud rate: 9,6 kbps to 12 Mbps

General data

- Installation: 35 mm DIN top-hat rail
- Dimensions (H x W x D): 114,5 x 45,2 x 99 mm
- Protective system: IP20
- Operating temperature: 5 °C to 55 °C
- Storage temperature: -20 °C to 70 °C
- PROFIBUS-Types: DP, DP-V1, FMS, MPI
- Extension: DP Diag Rep (till 5 pieces)

Terminal configuration

PROFIBUS DP

Clamping connection for DP

Channel 2		Channel 3	
2	B	6	B
3	A	7	A
1+4	Shield	5+8	Shield

Channel 4		Channel 5	
10	A	14	A
11	B	15	B
9+12	Shield	13+16	Shield

Channel 1 SUB-D socket

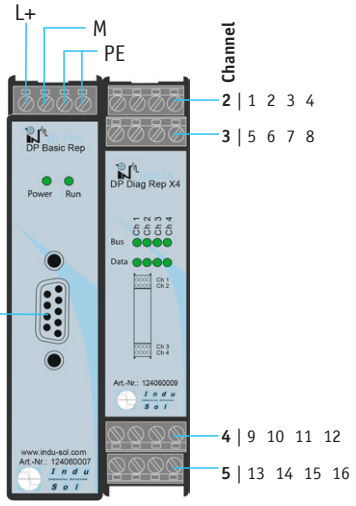

INBLOX® DP Basic Rep

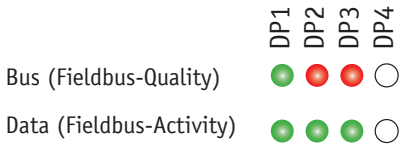

Fieldbus LED Green:
Everthing o.k.

Data LED Green:
Data traffic exists

Power LED Green:
24V connected

RUN LED:
BUS LED for channel 1

BUS-LED red: Error detected
f.e.

- Error telegrams,
- Repeat telegrams,
- Device failures,
- Diagnostic messages,
- Noise failure

LED Diagnosis

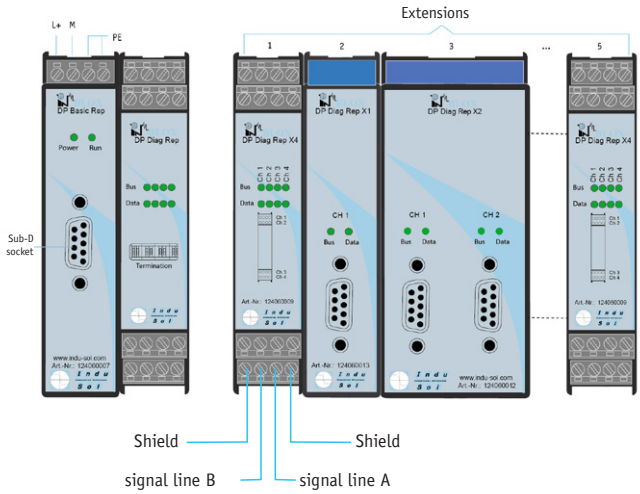

Sample configuration

Ordering details	Art. No.
INBLOX® DP Basic Rep	124060007

INBLOX® Ethernet head module

Function

The **Ethernet head module** is the basis of the premium and comfort version of the INBLOX® series. In addition to its 24 V supply voltage connection it has got a LAN connection for the integrated web server. The head is the core of the smart INBLOX® series and can be extended to max. 20 segments and five segments resp. by Diag Rep modules and Diag+ Rep modules. An alarm module can be connected in place of a fifth extension module. Event alarms are then given by switching contacts.
The E-head is provided with an extended logic and alarms are shown on the web screen as known from the INspektor®. For every extension module a device matrix with certain colours for relevant events can be displayed and the alarms stored as snapshots (up to 100 per extension module).
The head has different options to alert the user in case of network deterioration. It is possible to send an email, an SNMP trap or the IN-BLOX® can be integrated in a network monitoring software, such as PROmanage® NT.

Technical data

- Voltage supply: 24 VDC
- Power supply: 0,3 A
- Connection: screw terminal for 24 V voltage supply
  LAN-Connection for Web interface
- Baud rate: 9,6 kbps to 12 Mbps

- Ethernet:
  - Baud rate: 100 Mbps / 10 Mbps
  - Connection: RJ45
  - Protocols: IPv4 via DHCP or manual
  - Time server: NTP-time synchronizing

General data

- Installation: 35 mm DIN top-hat rail
- Dimensions (H x W x D): 114,5 x 22,5 x 99 mm
- Protective system: IP20
- Operating temperature: 5 °C to 55 °C
- Storage temperature: -20 °C to 70 °C
- PROFIBUS types: DP, DP-V1, FMS, MPI
- Extension: DP Diag Rep, DP Diag+ Rep, alarm module
  PA Diag+, DP-Master
- Automatic alarm: Email
  SNMP-Trap
  SNMP-request with PROmanage® NT

LED

Power: lights up green, if 24 V is connected

Run: blinks green at 1 Hz, rate if everything is o.k.

Ordering details	Art. No.
INBLOX® Ethernet head module (E head)	124060000

INBLOX® Ethernet head module

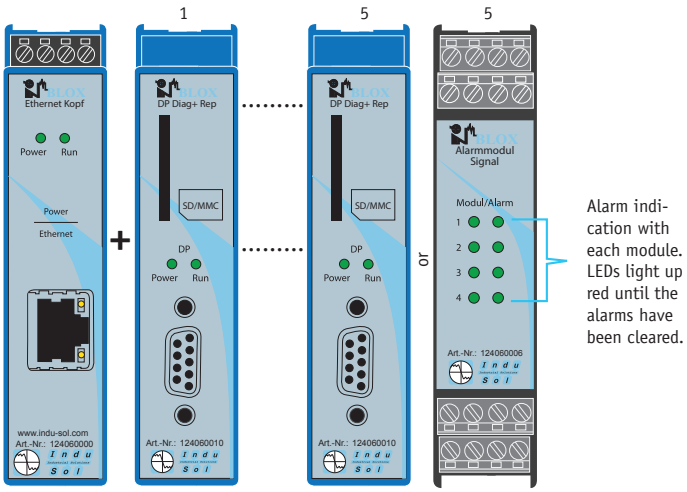

Sample configuration Comfort-Line

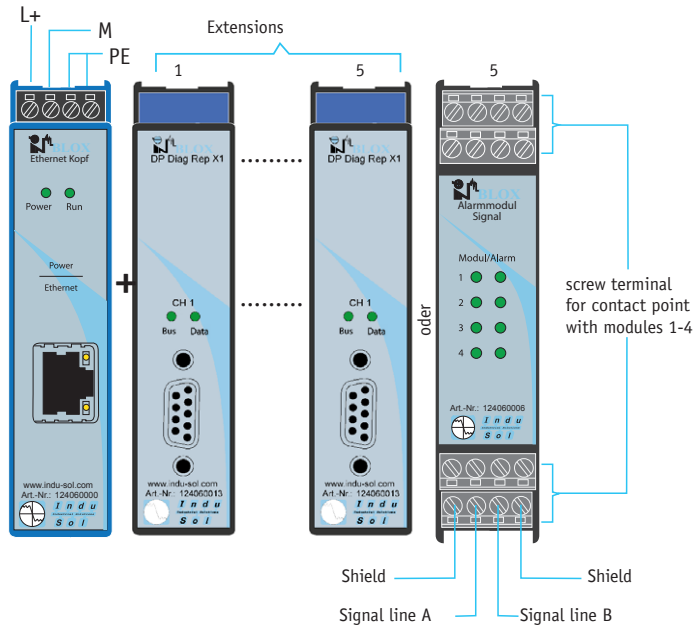

Sample configuration Premium-Line

INBLOX® DP Diag+ Rep

Function

The extension **DP Diag+ Rep module** is simply connected to the INBLOX® head module and is coupled with the backplane bus directly. The data exchange and power supply for this module takes place via the backlplane bus. This expansion module has an integrated PROFIBUS analysis, which monitors and assesses the whole telegram communication logical and physical. The determined state of network quality can be always requested via the web interface of the INBLOX® Ethernet head module or directy via the status LEDs.
The extension DP Diag+ Rep provides a PROFIBUS interface for connection of a PROFIBUS connector via SUB-D socket. The PROFIBUS network can be expanded by another segment or analysed by a further PROFIBUS master system per extension module, according to configuration of the INBLOX® Ethernet head module.

Technical data

- Voltage supply: 24 VDC with a backplane bus
- Power supply: 0,3 A with a backplane bus
- Connection: 9-pole sub-D PROFIBUS-connection
- Baud rate: 9,6 kbps to 12 Mbps

General data

- Installation: 35 mm DIN top-hat rail
- Dimensions (H x W x D): 114,5 x 22,5 x 99 mm
- Protective system: IP20
- Operating temperature: 5 °C to 55 °C
- Storage temperature: -20 °C to 70 °C
- PROFIBUS-types: DP, DP-V1, FMS, MPI
- Characteristics: card slot for SD/MMC memory cards

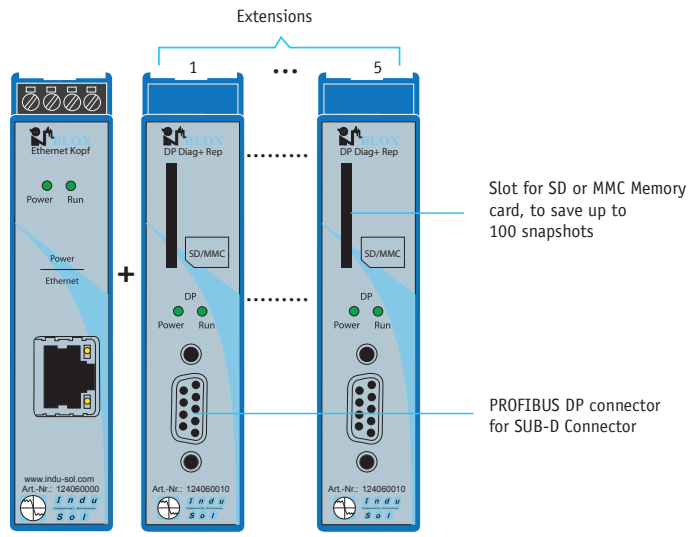

LED

Alarm: signal lights red, when alarm is lying ahead

Run: lights up green, if everthing is o.k.

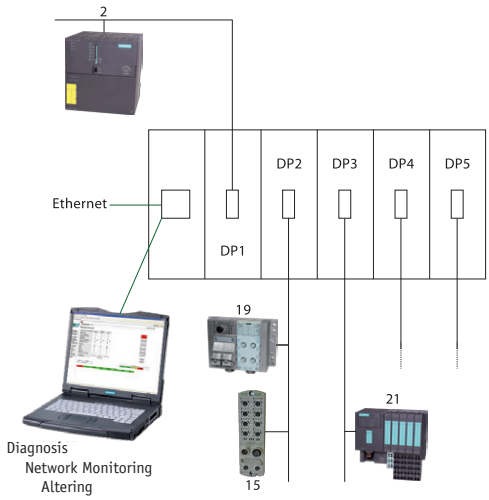

Ordering details	Art. No.
INBLOX® DP Diag+ Rep	124060010

INBLOX® Extension module Diag Rep X1

Function

The extension **DP Diag Rep X1 module** is simply connected to the INBLOX® head module and is coupled with the backplane bus directly. The data exchange and power supply for this module takes place via the backlplane bus. Each of these extension modules has an integrated PROFIBUS analysis, which monitors and assesses the whole telegram communication logical and physical. The determined state of network quality can be always requested via the web interface of the INBLOX® Ethernet head module or directy via the status LEDs.
The extension DP Diag Rep X1 provides a PROFIBUS interface for connection of a PROFIBUS connector via SUB-D socket. The PROFIBUS network can be expanded by another segment or analysed by a further PROFIBUS master system per extension module, according to configuration of the INBLOX® Ethernet head module.
If a segment ends or begins immediately on a connection of the extension module, the bus termination resistor should be activated directly on the connector. The PG socket of the connector can be used as online measuring point for suitable diagnostic tools.

Technical data

- Voltage supply: 24 VDC with a backplane bus
- Power supply: 0,3 A with a backplane bus
- Connection: 9-pole sub-D PROFIBUS-connection
- Baud rate: 9,6 kbps to 12 Mbps

General data

- Installation: 35 mm DIN top-hat rail
- Dimensions (H x W x D): 114,5 x 22,5 x 99 mm
- Protective system: IP20
- Operating temperature: 5 °C to 55 °C
- Storage temperature: -20 °C to 70 °C
- PROFIBUS-types: DP, DP-V1, FMS, MPI

LED

Bus: Bus health per channel

- **Green:** Everything is okay
- **Red:** Error telegram, telegram repetition, diagnostic messages, node failure

Data:
- **Green:** Bus activity on the channel
- **Red:** Configuration problems in PB
- **Off:** No bus activity

Ordering details	Art. No.
INBLOX® Extension module DP Diag Rep X1	124060013

INBLOX® Extension module Diag Rep X1

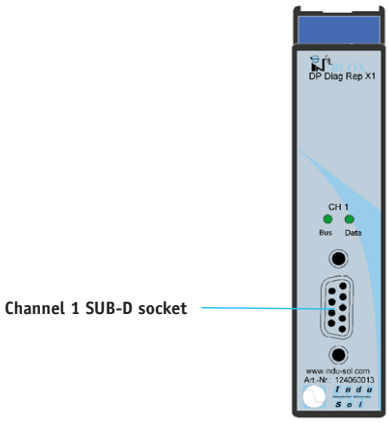

Connection diagram

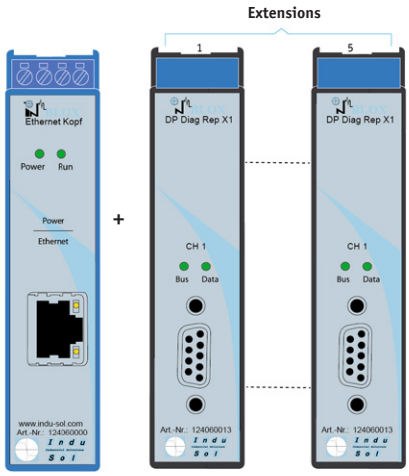

Sample configuration

INBLOX® Extension module Diag Rep X2

Function

The extension **DP Diag Rep X2 module** is simply connected to the INBLOX® head module and is coupled with the backplane bus directly. The data exchange and power supply for this module takes place via the backlplane bus. Each of these extension modules has an integrated PROFIBUS analysis, which monitors and assesses the whole telegram communication logical and physical. The determined state of network quality can be always requested via the web interface of the INBLOX® Ethernet head module or directy via the status LEDs.
The extension DP Diag Rep X2 provides a PROFIBUS interface for connection of a PROFIBUS connector via SUB-D socket. The PROFIBUS network can be expanded by another segment or analysed by a further PROFIBUS master system per extension module, according to configuration of the INBLOX® Ethernet head module.
If a segment ends or begins immediately on a connection of the extension module, the bus termination resistor should be activated directly on the connector. The PG socket of the connector can be used as online measuring point for suitable diagnostic tools.

Technical data

- Voltage supply: 24 VDC with a backplane bus
- Power supply: 0,3 A with a backplane bus
- Connection: 2 x 9-pole sub-D PROFIBUS-connection
- Baud rate: 9,6 kbps to 12 Mbps

General data

- Installation: 35 mm DIN top-hat rail
- Dimensions (H x W x D): 114,5 x 45 x 99 mm
- Protective system: IP20
- Operating temperature: 5 °C to 55 °C
- Storage temperature: -20 °C to 70 °C
- PROFIBUS-types: DP, DP-V1, FMS, MPI

LED

Bus: Bus health per channel

- **Green:** Everything is okay
- **Red:** Error telegram, telegram repetition, diagnostic messages, node failure

Data:
- **Green:** Bus activity on the channel
- **Red:** Configuration problems in PB
- **Off:** No bus activity

INBLOX® Extension module Diag Rep X2

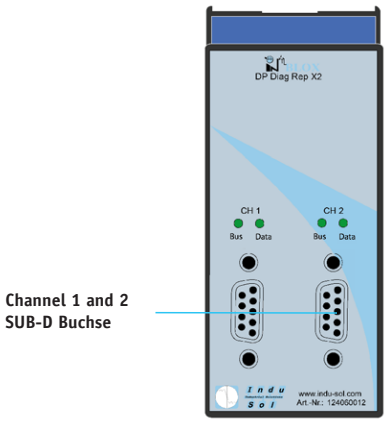

Connection diagram

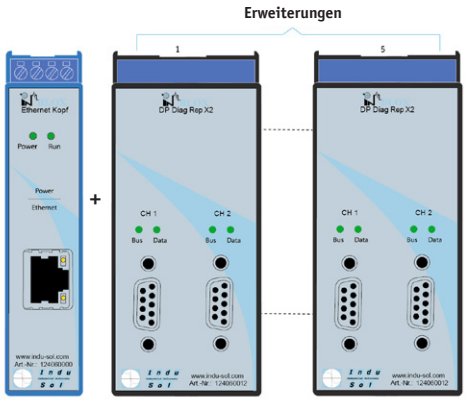

Ordering details	Art. No.
INBLOX® Extension module DP Diag Rep X2	124060012

INBLOX® Extension module DP Diag Rep X4

Function

The extension **DP Diag Rep X4** is provided with four terminals and is able to open four segments in each case.
It is simply connected to the head and is coupled with the backplane bus directly. It obviates the need of a separate voltage supply.
Up to five extension modules can be connected to every head, whereby it is possible to create up to 25 segments (Basic Repeater) or 20 segments (E head) per network.
The PROFIBUS can be converted from its original line topology to a star topology and spur lines designed without reservation. The applied LEDs ensures for a first simple diagnosis and monitoring. The diagnosis is also possible via the websurface, when its connected to the E-head.

Technical data

- Voltage supply: 24 V with a backplane bus
- Power supply: 0,3 A with a backplane bus
- Connection: 4 screw terminals – OUT (assignment: shield/B/A/shield)
- Transmission rate: 9,6 kBit/s to 12 MBit/s

General data

- Installation: 35 mm DIN top-hat rail
- Dimensions (H x W x D): 114,5 x 22,5 x 99 mm
- Protective system: IP20
- Operating temperature: 5 °C to 55 °C
- Storage temperature: -20 °C to 70 °C
- PROFIBUS types: DP, DP-V1, FMS, MPI

Terminal configuration

PROFIBUS DP

Terminal connection for DP

Channel 1		Channel 2	
2	B	6	B
3	A	7	A
1+4	shield	5+8	shield

Channel 3		Channel 4	
10	A	14	A
11	B	15	B
9+12	shield	13+16	shield

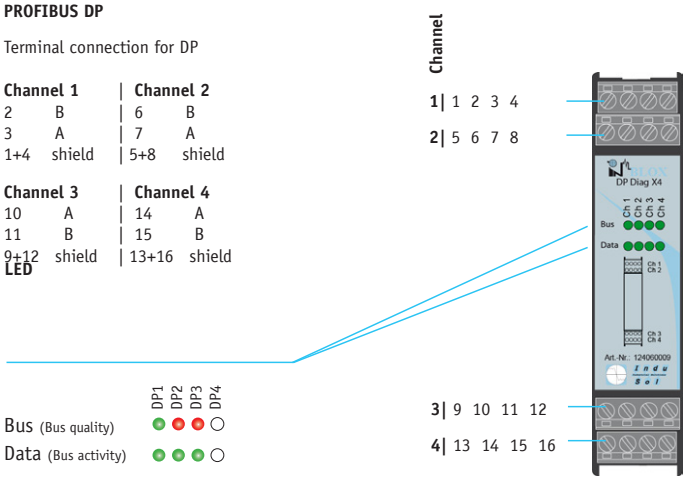

BUS LED GREEN: lights up green, if everything is okay

Data LED GREEN:
Data traffic exists

BUS LED RED: detected defects e.g.

- Error telegrams,
- Telegram repetition,
- Diagnostic messages,
- Node failure

Ordering details	Art. No.
INBLOX® Extension DP Diag Rep X4	124060009

INBLOX® Extension module DP Diag Rep X4

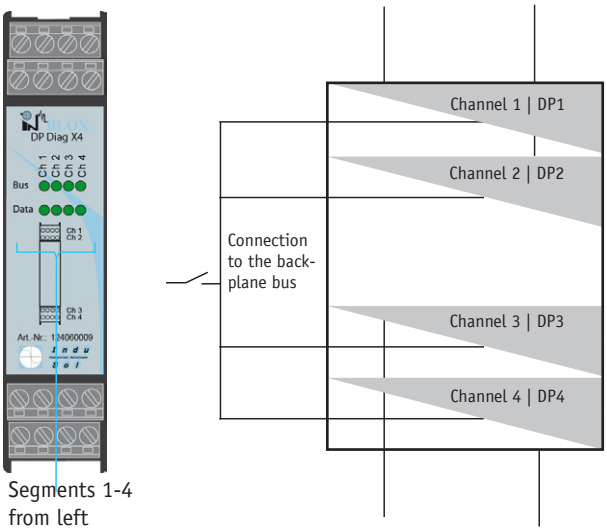

Sample configuration

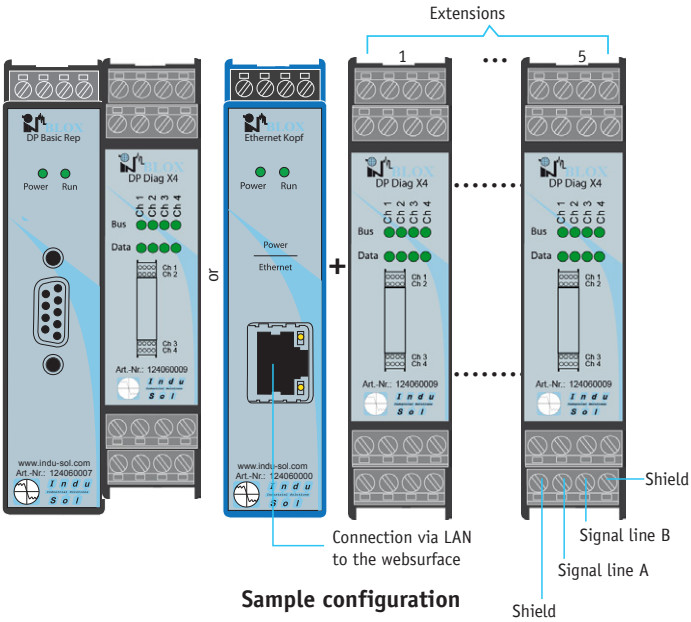

Sample configuration

INBLOX® Alarm module

Function

The **alarm module** comes with four terminals and is capable of monitoring one INBLOX® module per terminal. If available, it is always the last module to be connected and is coupled directly via a backplane bus. Therefore no separate voltage supply is needed. Every terminal/channel has got a switching output for alarms and a reset input. The alarm module can be installed in connection with the E-head only.
In case of alarm the alarm LED lights up until it is cleared manually via the web interface or the reset input is actuated. The different alarm LEDs show which INBLOX® module is affected. The web interface of the E-head is used to select the relevant module to show the relevant device and detailed information.

Technical data

- Connection: 4 screw terminals
- Voltage supply: 24 V with a backplane bus
- Power supply: 0,3 A with a backplane bus

General data

- Installation: 35 mm DIN top-hat rail
- Dimensions (H x W x D): 114,5 x 22,5 x 99 mm
- Protective system: IP20
- Operating temperature: 5 °C to 55 °C
- Storage temperature: -20 °C to 70 °C

Terminal configuration

Alarm module

Terminal connection

Alarm for module 1		Alarm for module 2	
1	IN+	5	IN+
2	IN-	6	IN-
3+4	OUT	7+8	OUT

Alarm for module 3		Alarm for module 4	
9	IN+	13	IN+
10	IN-	14	IN-
11+12	OUT	15+16	OUT

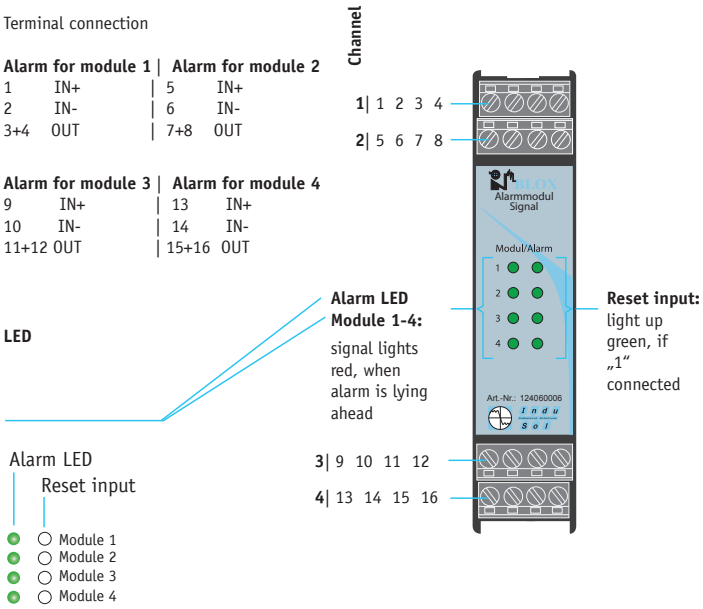

Ordering details	Art. No.
INBLOX® Alarm module	124060006

INBLOX® Alarm module

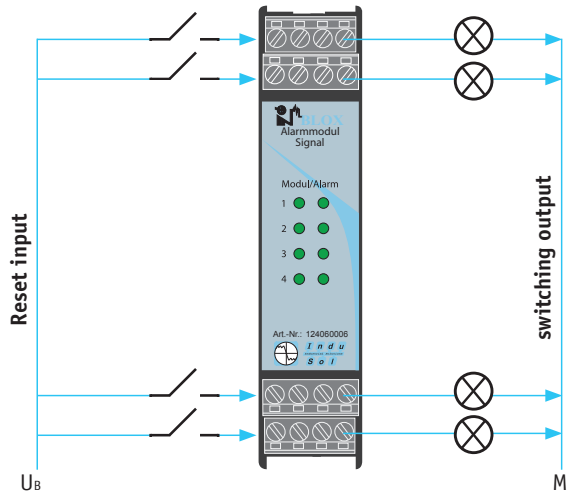

Connection diagram

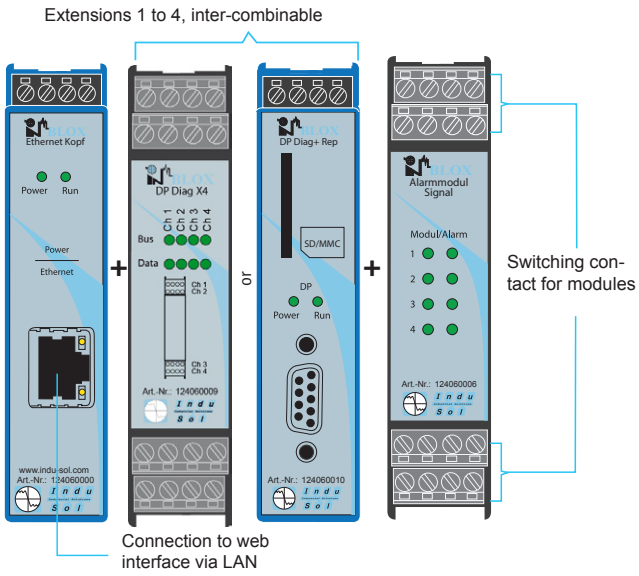

Sample configuration

MULTIrep family – The compact multiple repeater

Function

Using a repeater allows an enlargement of your PROFIBUS network until up to 126 devices and to create higher line lengths depending on the fieldbus transmission speed. Per segment a maximum of 32 devices (31 + repeater) is acceptable. The **MULTIrep** produces a voltage signal in two, five or even seven directions and raises the signals to the PROFIBUS standard level.

From the physical point of view the MULTIrep provides up to seven isolated segments. The integrated diagnosis via LED allows a simple troubleshooting in each segment.

Instruction for use

Using the MULTIrep creates up to seven galvanically isolated segments. For the purpose of diagnostic measurements a measuring point should be provided at the beginning and end of every segment. Therefore the PG interfaces at the 9-pin sub-D plugs can be used as measuring points.

If a segment ends or begins directly at the connections of the repeater, it is necessary to activate the bus terminating resistors at the plugs.

Fieldbus connection and termination

PROFIBUS is connected by a 9 pin sub-D socket (according to PROFIBUS guideline). If the segment ends or starts directly at repeater terminals, bus termination resistors have to be activated directly at the plugs.

Technical data

- Voltage supply: 24 VDC ±20%
- Power supply: 0,3 A
- Connection: 2-7 x 9-poliger Sub-D
- Baud rate: 9,6 kbps to 12 Mbps

General data

- Installation: 35 mm DIN top hat rail
- Dimensions (H x W x D): MULTIrep X2 - 105 x 75 x 40 mm
  MULTIrep X5 - 105 x 145 x 40 mm
  MULTIrep X7 - 105 x 212 x 40 mm
- Protective system: IP20
- Operating temperature: +5 °C to +55 °C
- Storage temperature: -20 °C to +70 °C
- PROFIBUS types: DP, DP-V1, FMS, MPI

Status LED

Bus: Status of the fieldbus per channel

- **Green:** Okay
- **Red:** Error telegram, telegram repetition, diagnostic message, device failure

Data:
- **Green:** Fieldbus activity on the channel
- **Red:** Configured problems in PROFIBUS
- **OFF:** No fieldbus activity

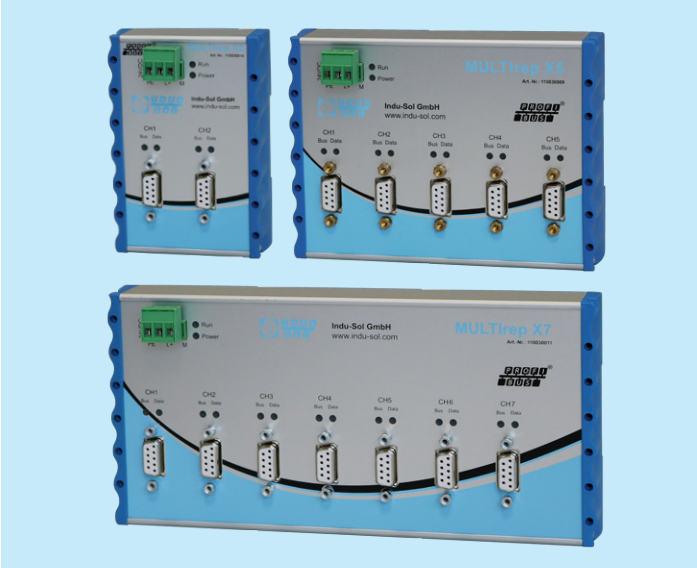

MULTIrep family

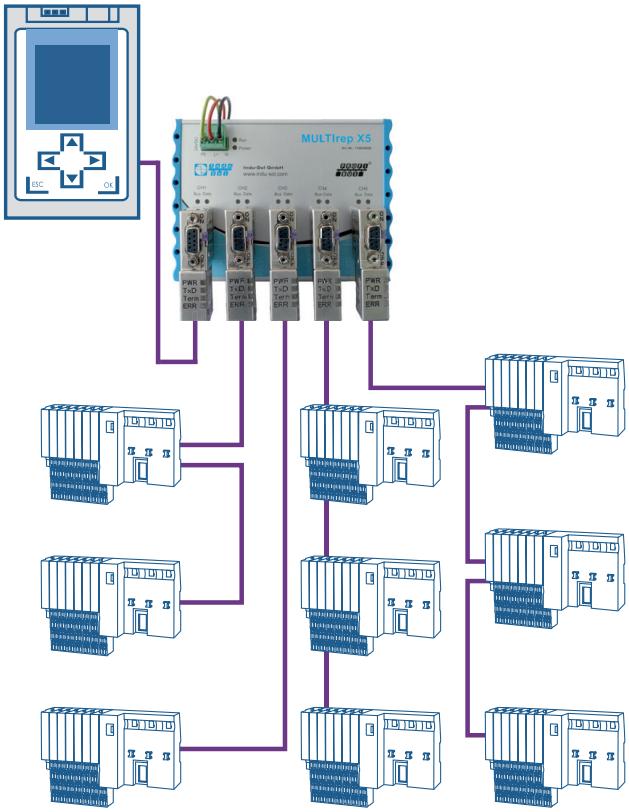

Example of use MULTIrep X5

Ordering details	Art. No.
MULTIrep X2	110030010
MULTIrep X5	110030009
MULTIrep X7	110030011

Compact repeater REpeato

Function

The **Compact repeater REpeato** is the smallest repeater of the PROFIBUS world but despite its smallness it can keep up with the big ones. It regenerates the signals in edge steepness, level and duty factor. The repeater is capable of supplying 32 devices over the full line distance as permitted by directive up to a max. transfer rate of 12 Mbps. Instead of the standard PROFIBUS connector plug it is installed by direct plugging on the D-subminiature connector of a PROFIBUS device configured in the network.
Should the required place of installation be freely selectable, the PBMB module specifically developed for this purpose must be used. The voltage supply (+24 V) is converted internally through a DC/DC transformer to +5 V and directly fed to the repeater by a standard pin assignment 5 and 6.

Instruction for use

The implementation of active spur lines is seen as a main field of use. Functions and operating states of the repeater are signalled by the integrated LED displays.

Electrical parameters

- Voltage supply: +5 VDC realized via PIN 5 and 6 directly from the slave or additional module PBMB
- Baud rate: 9,6 kbps to 12 Mbps (automatic recognition)
- Power input: Approx. 100 mA
- Connection: Insulation displacement connector technology (segment 1 and 2)
- Connection: Via sub-D switch (segment 1)

Ambient conditions

- Operation temperature: 0 °C to +60 °C
- Storage temperature: -25 °C to +75 °C
- Protective sytem: IP20

Design

- Dimensions (H x W x D): 64 x 17 x 40 mm
- Weight: Approx. 40 g
- Material casing: Metallised plastic casing

Status-LED

Power	Blue	Flashing	Repeater is detecting transfer rate, „R“ OFF
		Steady light	Transfer rate was detected, „R“ OFF
	Green	Flashing	Repeater is detecting transfer rate, „R“ ON
		Steady light	Transfer rate was detected, „R“ ON
Error	Red	Failing data are recognized on segment 2. Frequency of flashing depends on number of error telegrams (permanent lightning possible).	
BUS	Yellow	Data traffic on segment 2. Frequency of flashing depends on the baud rate and number of devices on the port (permanent lightning possible).	

Ordering details	Art. No.
Compakt repeater REpeato	110030004

Compact repeater REpeato

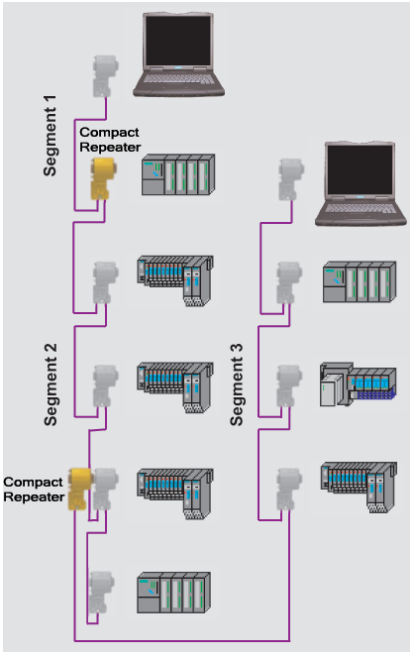

Example of use

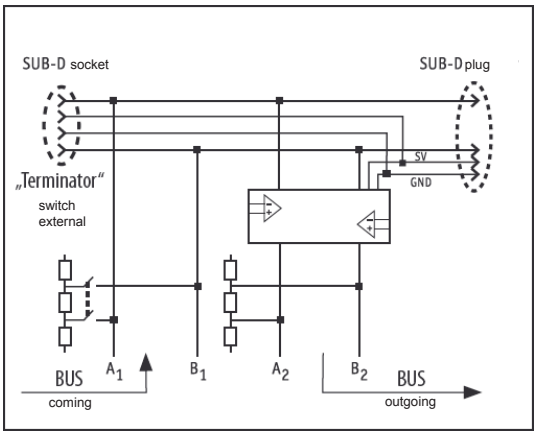

Interface diagram

Repeater IP67 MR (rough conditions)

Function

The **Repeater IP67**enables an expansion of a PROFIBUS network to a maximum of 126 nodes and a speeddependent cable length. Per segment are maximum 32 users (31 + repeater) permitted. By using repeaters, the voltage signal is regenerated into two directions and is raised into a PROFIBUS stadard level.

Instructions for use

With the **Repeater IP67** it is possible to build up two galvanically separated segments. For diagnostic measurements should be noted that a measuring point should be exist at the beginning and end of the segment as possible. The Repeater provides a glass-fiber reinforced housing acording to protection class IP67 for rough conditions.

Busanschluss and Terminierung

The PROFIBUS DP is connected via B-coded M12 plug connection (according to PROFIBUS guideline). If the segment ends or begins directly at the connections of the repeater, the unused PROFIBUS connections must be terminated by a M12 terminating resistor.

Technical data

- Supply voltage: 24 VDC ± 25%
- Power supply: < 60 mA
- Connection: 1 x 7/8" (Power)
  4 x M12 B coded (PROFIBUS)
- Transmission rate: 9,6 kBit/s to 12 MBit/s

General data

- Installation: 3 mounting holes Ø 5,4 mm
- Dimensions (H x W x D): 148,1 x 60,4 x 27 mm
- Industrial protection: IP67
- Operating temperature: 0 °C to +55 °C
- Storage temperature: -25 °C to +70 °C
- PROFIBUS types: DP, DP-V1, FMS, MPI

Status LED

• LED BUS		yellow	on	PROFIBUS online
		red	on	PROFIBUS offline
			off	no communication
• LED PWR		green	flashing	baud rate detection active
			on	ready

Ordering details	Art. No.
Repeater IP67 MR (rough conditions)	110030001
Accessories	
Power supply connector 7/8 IP67 repeater	110120010
M12 terminating resistor (B coded) IP67	110100000

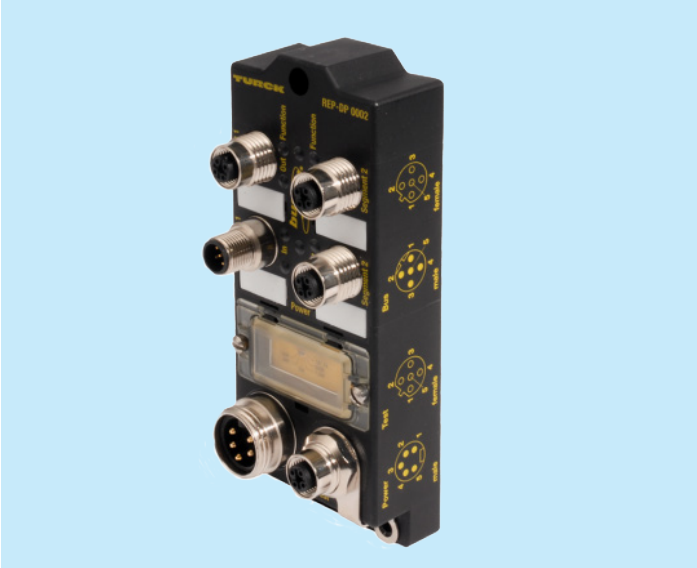

Repeater IP67 MR (rough conditions)

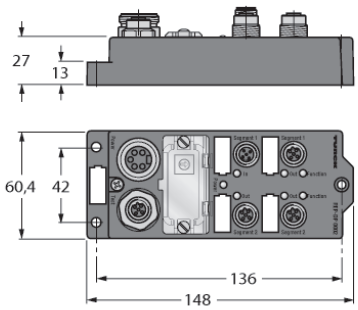

Engineering drawing

Power supply connector 7/8 IP67 repeater

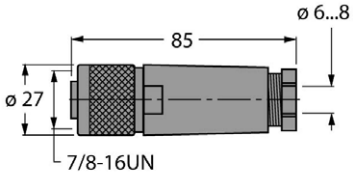

Engineering drawing

BLUambas® PROFIBUS

Function

The wireless system **BLUambas®** provides wireless data transmission in the fieldbus system PROFIBUS. Herewith mobile plant components or machines can be integrated simply into the system communication. For this reason BLUambas® is the perfect alternative for slip rings and trailing cables but without mechanic wear. As seen from the perspective of the controller the wireless system acts like a cable.

Instructions for use

BLUambas® for PROFIBUS ensures a transmission speed of up to 1,5 Mbps. To build up a PROFIBUS radio link one BLUambas® master module and at least one BLUambas® slave module are required. The maximum number of slave modules and PROFIBUS devices depends on the BLUambas® types.

BLUambas® is available with protection class IP20 or IP65 and can be freely selected within a radio link.

Variants

BLUambas® PROFIBUS Classic

A PROFIBUS radio link can be established between a master module and a maximum of one slave module. A maximum of four PROFIBUS devices can be installed behind the radio link and with up to 1.5 Mbps.

BLUambas® PROFIBUS Comfort

A PROFIBUS radio link can be established between a master module and a maximum of four slave modules. A maximum of four PROFIBUS devices can be installed behind the radio link and with up to 1.5 Mbps.

BLUambas® PROFIBUS Premium

A PROFIBUS radio link can be established between a master module and a maximum of eight slave modules. A maximum of four PROFIBUS devices can be installed behind the radio link and with up to 1.5 Mbps. In addition PROFIsafe communication can be transmitted.

Technical data

BLUambas® PROFIBUS (master+slave module):

- Transmission standard: IEEE 802.15.1 (Bluetooth)
- Transmission frequency: 2,4-2,4835 GHz
- Range indoor: 100m (depending on antenna)
- Range outdoor: 300m (depending on antenna)
- Antenna connection: SMA socket
- PB- refresh rate: 9,6kBit/s - 1,5MBit/s
- Temperature range: -20°C to 60°C
- PROFIBUS protocols: RS485 DPV0, DPV1

Version protection class IP 20:

- Installation: Top-hat rail
- Housing (H x W x D): 105 x 23 x 125 mm
- Voltage supply: 24 V DC, 2 W, terminal
- PROFIBUS interface: 9 pole Sub-D

Version protection class IP 65:

- Installation: 4 holes screw fastening
- Housing (H x W x D): 121 x 88 x 42 mm
- Voltage supply: 24 V DC, 2 W, M12 A coding
- PROFIBUS interface: M12 D coding

BLUambas® PROFIBUS IP20

BLUambas® PROFIBUS IP65

Ordering details	Art. No.
BLUambas® PROFIBUS Classic master module IP20	125100100
BLUambas® PROFIBUS Classic master module IP65	125100101
BLUambas® PROFIBUS Classic slave module IP20	125100102
BLUambas® PROFIBUS Classic slave module IP65	125100103
BLUambas® PROFIBUS Comfort master module IP20	125100104
BLUambas® PROFIBUS Comfort master module IP65	125100105
BLUambas® PROFIBUS Comfort slave module IP20	125100106
BLUambas® PROFIBUS Comfort slave module IP65	125100107
BLUambas® PROFIBUS Premium master module IP20	125100108
BLUambas® PROFIBUS Premium master module IP65	125100109
BLUambas® PROFIBUS Premium slave module IP20	125100110
BLUambas® PROFIBUS Premium slave module IP65	125100111

Accessories/antennas on request!

PROFIBUS cable solid

Function

The **PROFIBUS cable solid** is intended for a firm installation in dry and wet rooms. The double shielding makes the line suitable for use in an electromagnetic environment. This line is used for field bus systems, such as PROFIBUS DP; PROFIBUS FMS, Siemens SIMATEC NET which are all in accordance with DIN 19245, section 3 and EN 50170 cable type A as well as for the high-performance network bus line that has a rated impedance of 150 ohm. The fieldbus line is rated for transmission speeds of up to 12 Mbps. This line type is designed for a routed line laying either in dry or damp locations. The dual-shielding makes this line particulary suitable for use in electromagnetically loaded areas.

Application instruction

The standard field bus line is suitable for applications where the mechanical/chemical loads are low. It is also designed for system-related transmission rates between 1.5 Mbps and 12 Mbps. The transfer characteristics are system-confirming and thus ensure a high secure of data transmission. Together with the FastConnect stripping tool it can be used for rapid contacting. The line end can be prepared for a ready-to plug connection in one work step, particulary for the IDC (Insulattion Displacement Connector) method of termination.

Standards

- IEC 61158-2; DIN 19245 T3; EN 50170
- EN 60332-1-2

Chemical data

- RoHS 2002/95/EG

Construction

• Cable:	Cable type A
• Conductor:	AWG 22/1, bare
• Insulation:	FS-PE
• Diameter:	2,50 ±0,05 mm
• Shielding total:	Plastic laminted Aluminium foil
• Shielding:	Copper, wire 0,10 vz Optical coverage >85%
• Jacket:	Special PVC
• Diameter:	7,8 mm ±0,2 mm
• Colour:	Violett, RAL 4001

Electrical data

• Loop resistance:	Max. 150 Ohm/km according to VDE 0812
• Insulation resistance:	Min. 5 GOhm x km at +20°C
• Operating capacity:	Nom. 30nF/km
• Test voltage:	1000 V/DC
• Work voltage:	125 V
• Screen resistance:	< 9,5 mOhm/m
• Transfer impedance:	< 20 mOhm/m at 10 MHz

Mechanical data

• Bending radius:	12 x diameter during installation 6 x diameter fixed
• Temperatur range:	
fixed:	-5°C to +70°C
moved:	-30°C bis +80°C
• Max. tractive force:	100 N

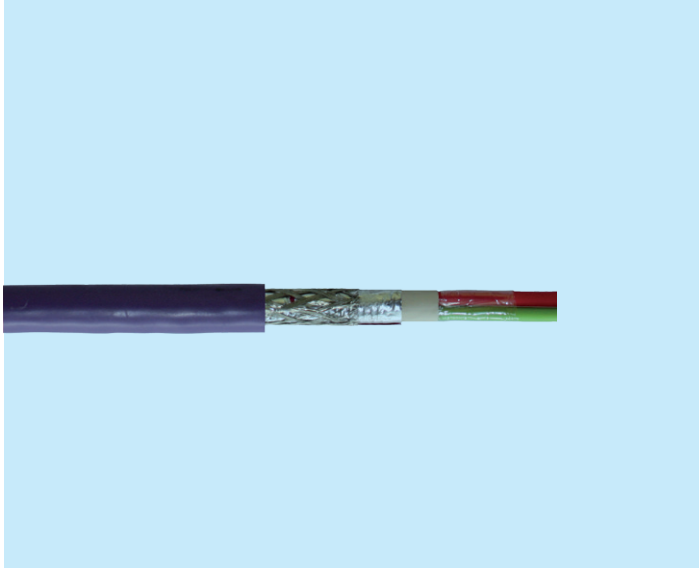

PROFIBUS cable solid

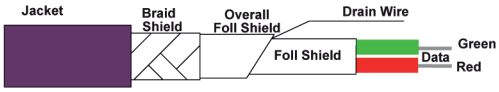

Engineering drawing

Ordering details	Art. No.
PROFIBUS cable solid	110070000
Accessories	
PROFIBUS Fast Connect Stripping Tool	110020032

PROFIBUS cable flexible

Function

The **PROFIBUS cable flexible** is used for highly flexible energy chains and constantly moving machine parts. The dual shielding mades this line type perfectly for electromagnetically loaded areas.

Application instruction

Highly flexible bus lines used for the PROFIBUS standard according to DIN 19249, section 3 and EN 50170 as well as high-performance data networks with a rated impedance of 150 W. This field bus line is rated for transmission rates of up to 12 Mbps.

Standards

- IEC 61158-2; DIN 19245 T3; EN 50170
- EN 60332-1-2

Chemical data

- RoHS 2002/95/EG

Construction

• Conductor:	AWG 24/7, bare
• Insulation:	FS-PE
• Diameter:	2,50 ±0,05 mm
• Winding:	Plastic foil
• Inner jacket:	-
• Shielding total:	Plastic laminted Aluminium foil
• Shielding:	Copper, wire 0,10 vz Optical coverage >80%
• Jacket:	Special PVC
• Diameter:	7,8 mm ±0,2 mm
• Colour:	Violett, RAL 4001

Electrical data

• Loop resistance:	Max. 175 Ohm/km according to VDE 0812
• Insulation resistance:	Min. 5 GOhm x km at +20°C
• Operating capacity:	Nom. 30nF/km
• Test voltage:	1000 V/DC
• Work voltage:	100 V
• Screen resistance:	< 14,0 mOhm/m
• Transfer impedance:	< 30 mOhm/m at 10 MHz

Mechanical data

• Bending radius:	20 x diameter during installation 10 x diameter fixed
• Temperatur range:	
fixed:	-5°C to +70°C
moved:	-30°C bis +80°C
• Max. tractive force:	100 N

Ordering details	Art. No.
PROFIBUS cable flexible	110070001
Accessories	
PROFIBUS Fast Connect Stripping Tool	110020032

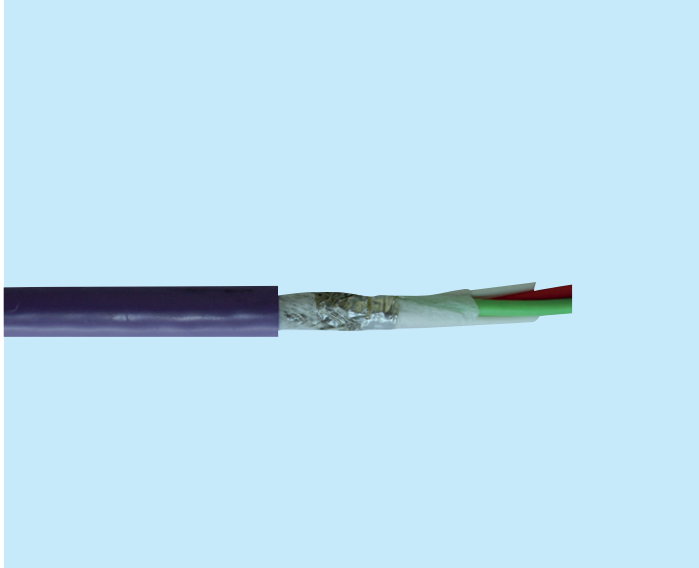

PROFIBUS cable flexible

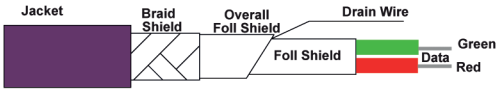

Engineering drawing

PROFIBUS cable drag chain capable

Function

The **PROFIBUS cable drag chain capable** has a very high abrasive resistance accompanied by an almost unlimited oil resistance. The data transmission reliability is guaranteed by the special overall braided screen.

Instructions for use

The PROFIBUS Line drag chain capable meets highest damands when it comes to laying. The extremely high bending resistance of both the conductor material and braided screen provide for optimal and reliable use in energy chains.
Its resistance to oils, fats and coolants makes this line type also ideal for permanent installation in machine tool workshops.

Standards

- IEC 61158-2; DIN 19245 T3; EN 50170
- EN 60332-1-2; IEC 60754-2; UL AWM 21586

Chemical data

- RoHS 2002/95/EG; IEC 69811-2-1 (IRM 902, 4h at 70°C)
- UV resistant

Construction

• Conductor:	AWG 24/19, bare
• Insulation:	FS-PE
• Diameter:	2,50 ±0,05 mm
• Shielding total:	Plastic laminted Aluminium foil
• Shielding:	Copper, wire 0,10 vz Optical coverage >85%
• Jacket:	PUR FHF
• Diameter:	8,0 mm ±0,2 mm
• Colour:	Violett, RAL 4001

Electrical data

• Loop resistance:	Max. 150 Ohm/km according to VDE 0812
• Insulation resistance:	Min. 5 GOhm x km at +20°C
• Operating capacity:	Nom. 30nF/km
• Test voltage:	1000 V/DC
• Work voltage:	100 V
• Screen resistance:	<14,0 mOhm/m
• Transfer impedance:	<30 mOhm/m at 10 MHz

Mechanical data

• Bending radius:	8 x diameter during installation 4 x diameter fixed
• Temperatur range:	
fixed:	-30°C to +80°C
moved:	-10°C bis +50°C
• Radius:	8 x diameter
• Bbending cycles:	>4 Mio.
• Max. tractive force:	100 N

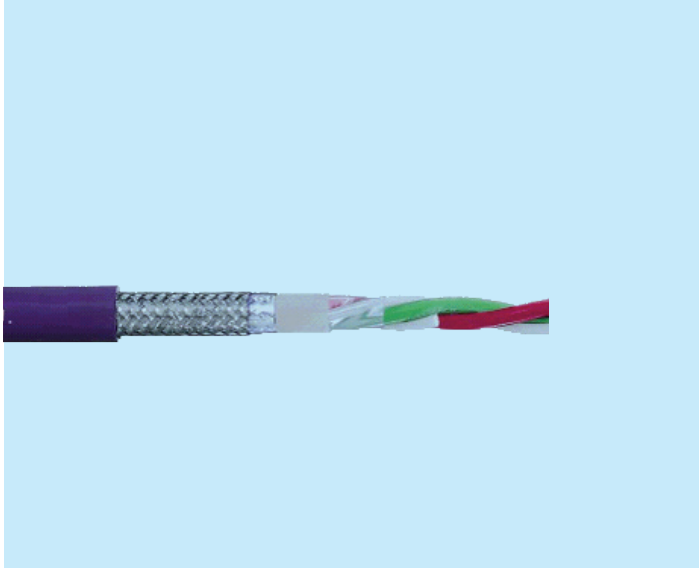

PROFIBUS cable drag chain capable

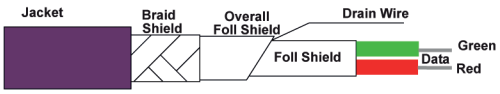

Engineering drawing

Ordering details	Art. No.
PROFIBUS cable drag chain capable	110070002
Accessories	
PROFIBUS Fast Connect Stripping Tool	110020032

PROFIBUS cable +FE solid

Function

The **PROFIBUS cable +FE solid** is a solid data cable for transmission of analog and digital signals on cabling according to PROFIBUS standard in mechanical engineering. The inner jacket as fast connect version and the double shield braiding ensures maximum shielding values.

Standards

- IEC 61158-2; DIN 19245 T3; EN 50170
- EN 60332-1-2

Chemical data

- RoHS 2002/95/EG

Construction

• Conductor:	AWG 24/1, bare
• Insulation:	FS-PE
• Diameter:	2,50 ± 0,05 mm
• Inner jacket:	Special PVC
• Shielding total:	Plastic laminted Aluminium foil
• Inner/outer screen:	Copper, wire 0,10 Optical coverage > 80% Shielding braid of V2A on request
• Screen section:	> 1,5 mm²
• Carrying capacity: (outer screen):	max. 10 A
• Jacket:	Special PVC
• Colour:	Violett, RAL 4001
• Diameter:	8,2 ± 0,2 mm

Electrical data

• Loop resistance:	max. 115 Ohm/km according to VDE 0812
• Insulation resistance:	min. 5 GOhm x km at +20°C
• Operating capacity:	nom. 30nF/km
• Test voltage:	1000 V/DC
• Work voltage:	100 V
• Screen resistance:	< 9,5 mOhm/m
• Transfer impedance:	< 15 mOhm/mat 10MHz

Mechanical data

• Max. tractive force:	120 N
• Bending radius:	6 x diameter during installation 12 x diameter fixed
• Temperatur range:	
fixed:	-30°C to +80°C
moved:	-5°C to +70°C

Ordering details	Art. No.
PROFIBUS cable +FE solid	110070017
PROFIBUS cable +FE solid V2A	On request

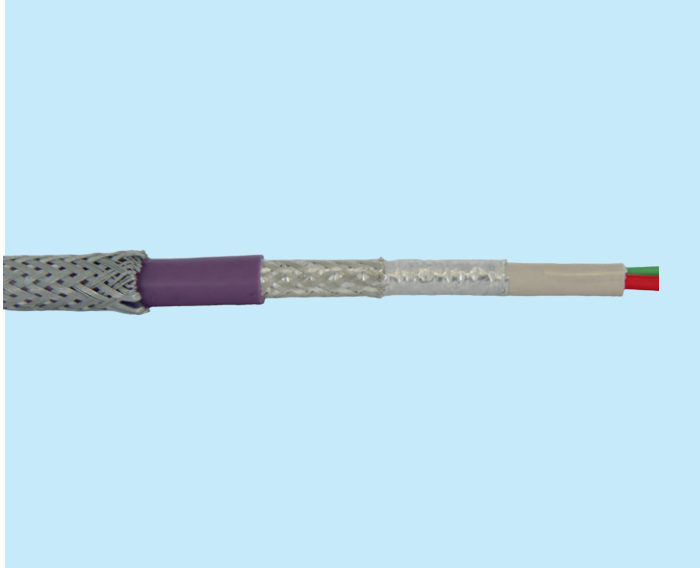

PROFIBUS cable +FE solid

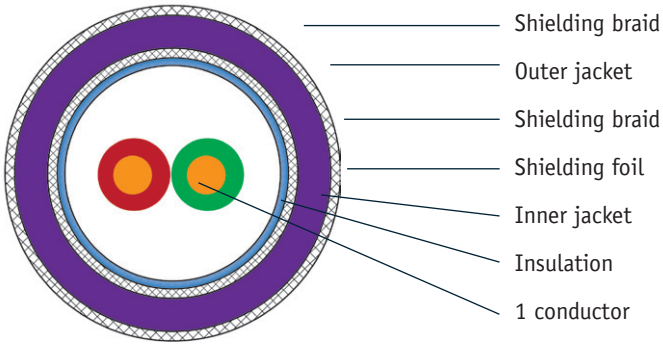

Cross section PROFIBUS cable +FE solid

PROFIBUS cable +FE flexible

Function

The **PROFIBUS cable +FE flexible** is a flexible data cable for transmission of analog and digital signals on cabling according to PROFIBUS standard in mechanical engineering. The inner jacket as fast connect version and the double shield braiding ensures maximum shielding values.

Standards

- IEC 61158-2; DIN 19245 T3; EN 50170
- EN 60332-1-2

Chemical data

- RoHS 2002/95/EG

Construction

• Conductor:	AWG 24/7, bare
• Insulation:	FS-PE
• Diameter:	2,50 ± 0,05 mm
• Inner jacket:	Special PVC
• Shielding total:	Plastic laminted Aluminium foil
• Inner/outer screen:	Copper, wire0,10 Optical coverage > 80%
• Screen section:	> 1,5 mm²
• Carrying capacity: (outer screen):	max. 10 A
• Jacket:	Special PVC
• Colour:	Violett, RAL 4001
• Diameter:	8,2 ± 0,2 mm

Electrical data

• Loop resistance:	max. 175 Ohm/km according to VDE 0812
• Insulation resistance:	min. 5 GOhm x km at +20°C
• Operating capacity:	nom. 30nF/km
• Test voltage:	1000 V/DC
• Work voltage:	100 V
• Screen resistance:	< 14,0 mOhm/m
• Transfer impedance:	< 20 mOhm/mat 10MHz

Mechanical data

• Max. tractive force:	120 N
• Bending radius:	20 x diameter during installation 10 x diameter fixed
• Temperatur range:	
fixed:	-30°C to +80°C
moved:	-5°C to +70°C

Ordering details	Art. No.
+FE PROFIBUS cable flexible	110070018

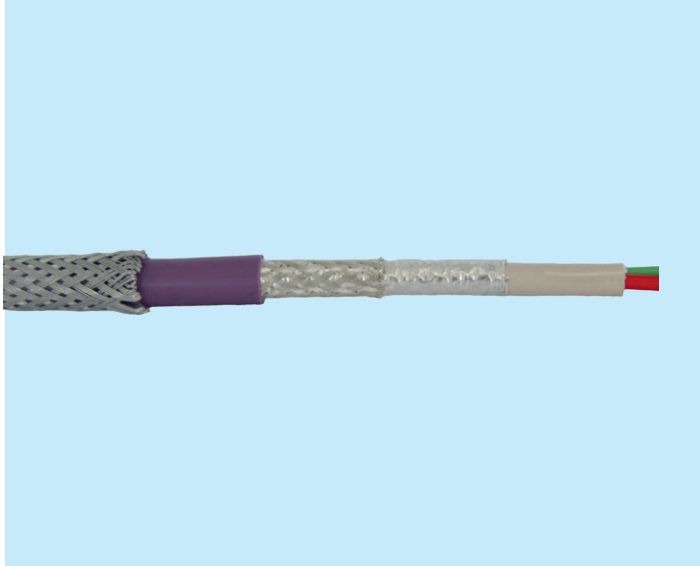

PROFIBUS cable +FE flexible

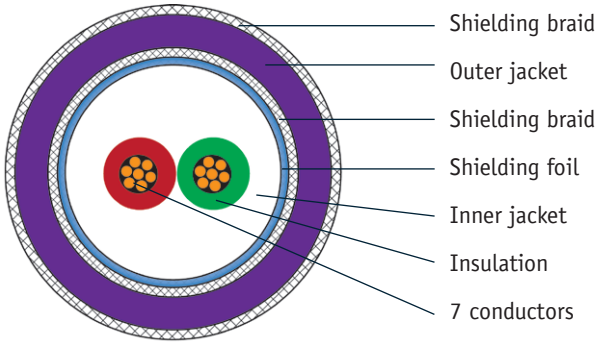

Cross section PROFIBUS cable +FE flexible

M12 Bus termination (B-coded) IP67

Function

The **Bus termination IP67** is used to properly terminate a PROFIBUS DP segment. Because of its external voltage supply, as many users as required can be either connected or disconnected without creating any disturbances on the bus.

Elektrische Werte

- Operating voltage: 24 VDC
- Current/contact: Max. 4 A

Environmental conditions

- Operating temperature: -25 °Cto +85 °C
- Industrial protection: IP67 (EN 60529) and NEMA 1, 3, 4, 6 P

Design

- Bus connection: Plug, M12x1 (B-encoded)
- Casing: Plastic
  M12 plug, oil-resisting
- Contact carrier: M12 plug PA6 (plastic mat.)
- Contact material: Gold-plated brass

M12 Bus termination (B-coded) IP67

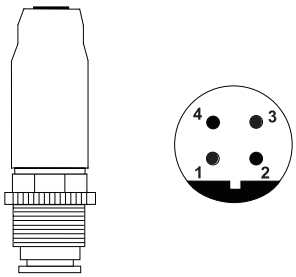

Engineering drawing

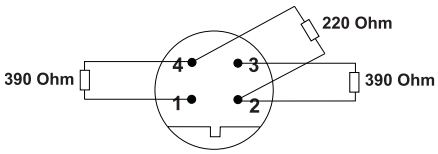

Pin 1: 5 V
Pin 2: A line (green)
Pin 3: 0 V
Pin 4: B line (red)

Pin assignment

Ordering details	Art. No.
M12 Bus termination (B- coded) IP67	110100000

Control cabinet bushing M12 (B-coded)

Function

The cable entry into switchgear cubicles or terminal box is rendered through a bushing. The bus lines are connected via B-encoded M12 plug-and-socket connectors.

Application instruction

The M12x1 bushing is designed for PROFIBUS lines to be laid in switchgear cubicals, terminal boxes etc. The connection is realised by B-encoded plug-and-socket connectors. Holes of 12.7 mm diagram are needed for the M12x1 bushings.

Ambient conditions

- Operating temperature: -40 °C to +80 °C
- Industrial Protection: IP67 and NEMA 1, 3, 4, 6

Design

- Casing for plug and socket connector: Nickel-plated brass, creepage and clearance in air to VDE 0110, size C (250 V AC /300 VDC)
- Contact carrier: PA6 (plastic)
- Contact material: Gold-plated brass

Control cabinet bushing M12 (B-coded)

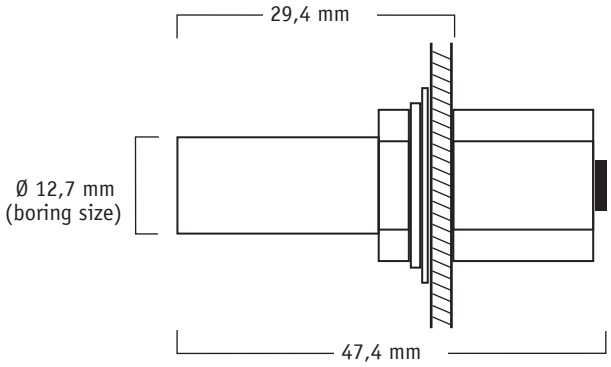

Engineering drawing

dowel:

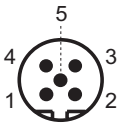

Pin 1-4 plated trough

Pin 1: not used
Pin 2: A line (greem)
Pin 3: not used
Pin 4: B line (red)
Pin 5: not used

socket:

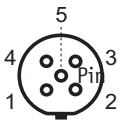

Pin 1: not used
Pin 2: A line (green)
Pin 3: not used
Pin 4: B line (red)
Pin 5: not used

Pin assignment

Ordering details	Art. No.
M12 Control cabinet bushing M12 (B-coded)	110060000

T piece M12, fully shielded, 12Mbps

Function

The **T piece M12** compact is used to connect PROFIBUS devices.

Ambient conditions

- Operating temperature: -30°C to +90°C
- Industrial protection: IP65, IP67, IP68

Design

- Contacts: Gold-plated brass
- Contact-carrier: Plastic violet
- Coupling nut: Nickel-plated brass
- Case: Plastic black
- Coding: M12 B-coded
- Shield: 360°

T piece M12

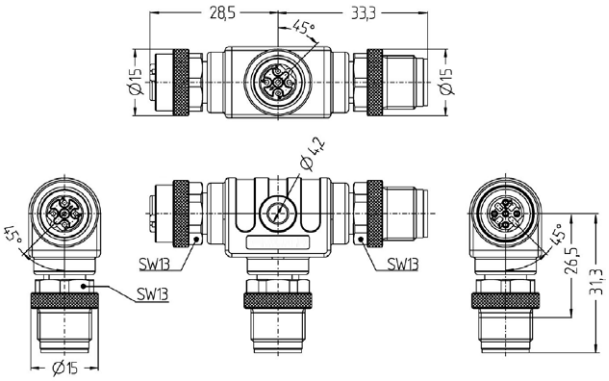

Engineering drawing

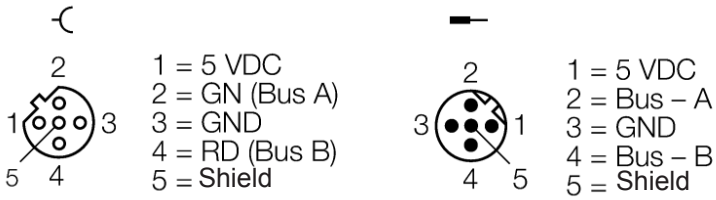

Pin assignment

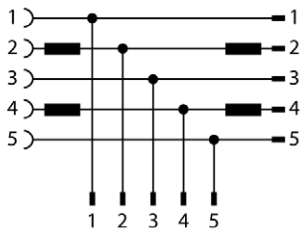

Wiring diagram

Ordering details	Art. No.
T piece M12	110100009

T pieces M12 compact

Function

The **T piece M12 compact** is used to connect PROFIBUS devices. Encoding turned by 90°

Technical data

• Encoding	B - invers
• Rated current:	(TU = 40 °C), 4 A
• Volume resistance:	≤ 5 mΩ
• Rated transient voltage:	1 kV
• Insulation resistance:	≥ 1 GΩ
• Pin diameter:	1 mm
• Category of overvoltage:	II

Ambient conditions

• Working temperature:	-25 °C to +80 °C
• Protective system:	IP68
• Pollution degree:	3

Design

• Pole number:	4
• Operating voltage [V]:	4-pol. 30 VAC
• Contacts:	CuSn
• Contact surface	Ni/Au
• Contact carrier	PUR
• Body:	PUR
• Knurled screw:	Brass nickel-plated
• Sealing	Viton
• Mechanical life:	Min. 100 plug cycles

T pieces M12 Compact

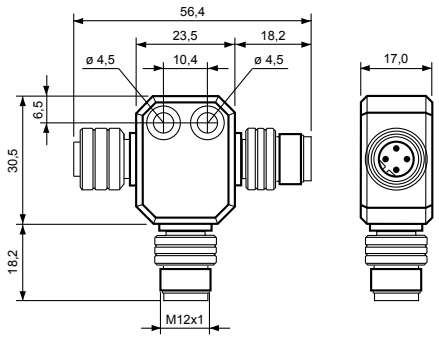

Engineering drawing

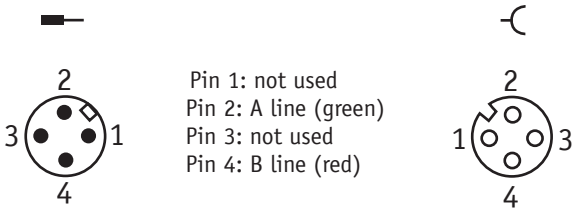

Pin 1: not used
Pin 2: A line (green)
Pin 3: not used
Pin 4: B line (red)

Pin assignment

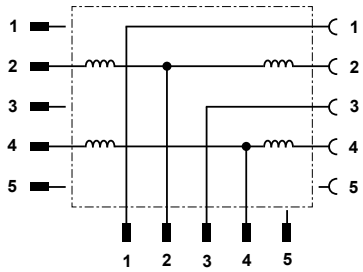

Wiring diagram

Ordering details	Art. No.
T-Stück M12 compact	110100002

T pieces M12 (PROFIBUS PA)

Function

T piece M12 (PROFIBUS PA) serves as connector of PROFIBUS PA devices.

Technical data

- Rated current: Max. 250 V
- Current carrying capacity: 4 A
- Insulation resistance: ≥ 108 Ω
- Volume resistance: ≤ 5 mΩ

Ambient conditions

- Ambient temperature: -30 °C to +90 °C
- Protective system (Dummy): IP67, only with srwes
- Protective system: (plug-in connector) IP67, only in mated condition
- Pollution degree: 3/2

Design

- Pole number: 4
- Plug-in connector: Coupler, 2x, M12x1, straight
- Handhold: Plastic, PA 6, black
- Contact carrier Plastic, TPU, black
- Contacts: Metal, CuZn, gold plate
- Union nut and screw: Metal, CuZn, nickel plate
- Sealing Plastic, FPM (Viton)
- Mechanical life: Min. 100 plig cycles

CE mark

Connectors are passive devices and not subject to CE marking according to EU guidelines.

Ordering details	Art. No.
T pieces M12 (PROFIBUS PA)	110100003

T pieces M12 (PROFIBUS PA)

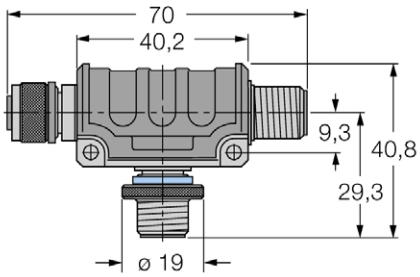

Engineering drawing

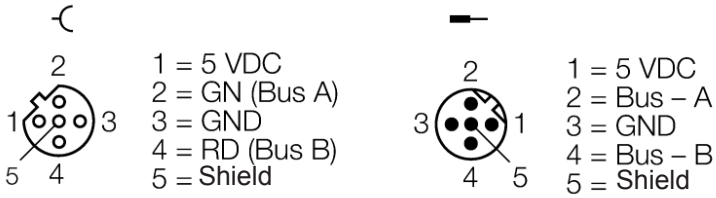

nen

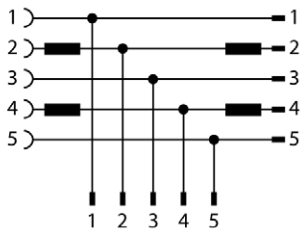

Wiring diagram

Active stub line "ASTL" MIYATCHI

Function

The **ASTL** allows the feedback-free connection of a device as an active stub line. This is possible because of the integrated repeater function in the connector. The 5 V supply required for repeater operation shall be made available through the pin 5 (GND) and the pin 6 (+5 V) of the contacted 9-pin sub-D socket. It can be basically assumed that all slaves of the PROFIBUS norms support the relevant pin assignment. It can be basically assumed that all slaves of the PROFIBUS norms support the relevant pin assignment.

Connection

- 9-pin sub-D plug with integrated repeater (X1 cable outlet axial)
- 9-pin sub-D plug (X2 outlet axial 45°)

Electrical parameters

- Baud rate: 9,6 kbps to 12 Mbps
- Supply voltage: 4.75 to 5.25 VDC has to be provided by each PROFIBUS user (Pin 5 GND, Pin 6 +5V)

Design

- Length: 60 cm

Ambient conditions

- Operating temperature: 0 °C to +60 °C
- Transport / storage temperature: -20 °C to +60 °C
- Industrial protection: P20
- Relative humidity: 75 % (non-condensing)

Pin assignment

Connector X1, connection measuring (repeater function)

Pin	Function	Note
1	not used	
2	M24	connects to X2 Pin 2
3	B	RS 485 data
4	not used	
5	GND	connects to X2 Pin 5
6	VCC	supply voltage +5V
7	P24	connects to X2 Pin 7
8	A	RS 485 data reversed
9	not used	

Connector X2, connection slave

Pin	Function	Note
1	not used	
2	M24	connects to X1 Pin 2
3	B	RS 485 data
4	RTS - AS	directional control from slave
5	GND	connects to X1 Pin 5
6	not used	
7	P24	connects to X1 Pin 7
8	A	RS 485 data reversed
9	not used	

Ordering details	Art. No.
Active stub line "ASTL" MIYATCHI	110040006

Active stub line "ASTL" MIYATCHI

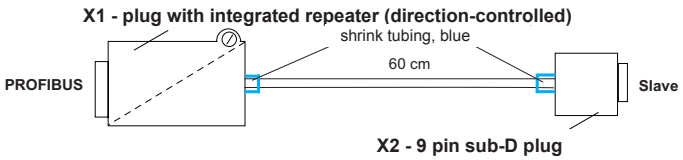

Engineering drawing

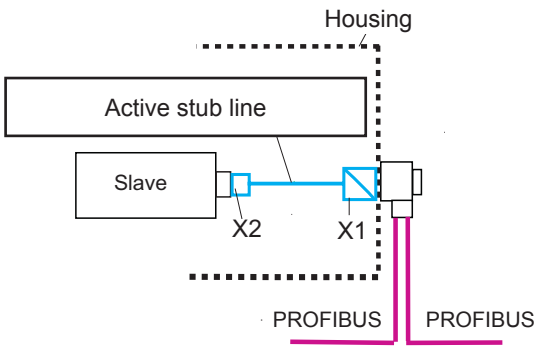

Example of use

Notizen

Infrastructure components Ethernet/PROFINET

Measuring points **98**

Measuring point PNMA II 98
Measuring point iPNMA 99

Switches **100**

PROFINET Switch PROmesh P9 100

BLUambas® PROFINET **101**

Cable and accessories **102**

PROFINET cable Cat 5, Typ A, solid 102
PROFINET cable Cat 5, Typ B, flexible 103
PROFINET cable Cat 5, Typ C, drag chain capable 104
PROFINET cable Cat 5, Typ A, solid +FE 105
PROFINET cable Cat 5, Typ B, flexible +FE 106
Control cabinet bushing SSD EMC 107
Control cabinet bushing SSD 108

Connector **109**

Connector RJ45 Fast Connect Plug 180°/90° 109
RJ45/8A Cat 6A Plug, configurable 110
Round plug connector IE Fast Connect Plug PRO M12 111

Mesasuring point PNMA II

Function

The PROFINET measuring adapter II (PNMA II) serves as an access point for feedback-free telegram recording in PROFINET networks and further ethernet-based networks ander production conditions. A permanent installation of the measuring adapter in the network connection between the automation device (SPC) and the first switch is recommended, because typically the greater part of the communication converges in this connection. Therefore two network sockets (network P1 and P2) are available at the unit.

To connect an analysis tool non-reactively (PN-INspektor® or laptop) two monitor sockets are provided (monitor M1 and M2). Thus it is possible to monitor in parallel both communication directions. An analysis tool is connected to the monitor sockets by two network lines. To analyse and evaluate the measuring results, the telegrams from both communication directions can be superimposed in terms of time. Error telegrams are not rejected by the PNMA II but forwarded.

Comparison: Telegram record during online mode

Recording by port mirroring at the switch

Advantages:
- No additional hardware required (no PNMA II)

Disadvantages:
- Time-consuming set-up of the mirror port at the switch
- High load of the switch by the mirror port
- Package losses at high data rates
- Bidirectional mirror port urgently required
- Defective telegrams are not mirrored

Recording by PNMA II

Advantages:
- No vacant switch port required
- No efforts on connecting a measuring tool
- Unconditionally bidirectional up to 100 Mbps

Disadvantages:
- Additional hardware

Technical data

• Installation:	35 mm DIN top-hat rail
• Dimensions (H x W x D):	105 x 38,9 x 75 mm
• Weight:	420 g
• Voltage input:	24 VDC (20-28 V, reverse polarity protected)
• Output voltage:	24 VDC (max. 1A)
• Protective system:	IP20
• Connector:	RJ45
• Delay time:	Less than 1 Bps at 100 Mbps
• Cable:	Cat 5 / Cat 5E, max. 100 m
• Operating temperature:	0 °C to +50 °C
• Storage temperature:	-15 °C to +75 °C
• Air humidity:	10 to 90 %, non-condensing

Information to connecting

To connect the PROFInet-INspektor® according to PNMA II two patch cables are required (crossover cable is not needed).

In case of a power supply failure of the PNMA II the PROFINET communication according to the PNMA II remains constant.

For power supply of additional analysing tools the port UOUT (24VDC) is provided for.

Ordering details	Art. No.
Measuring point PNMA II	114090100

Measuring point PNMA II

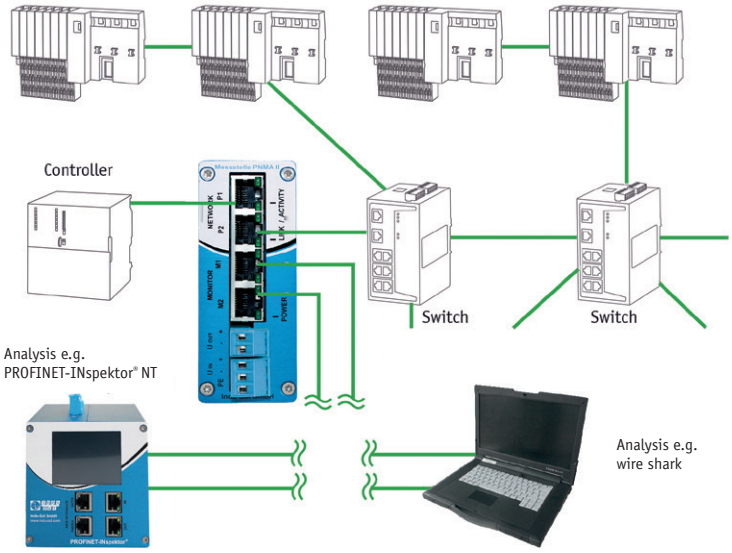

Example of topology - temporary telegram analysis

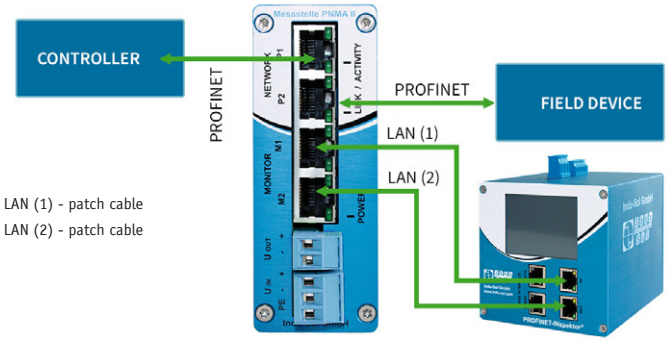

Example of connection

Intelligent Measuring Point iPNMA

Function

The intelligent PROFINET measuring point (**iPNMA**) combines the functions of a PROFINET measuring point with a simple PROFINET network analysis of the following quality parameters:

- Telegram jitter
- Telegram gaps
- Telegram overtakes
- Netload
- Update rate
- Device diagnostics
- Device failures / restarts
- Error telegrams

In this case, the evaluation of the recorded data does not take place on the device itself, but all data are queried and processed by the PROmanage® NT software. We recommend installing the iPNMA permanently in the network connection between the automation device (controller) and the
first switch, because the major part of the communication typically passes through here. Two network jacks (Network P1 and P2) are available for this purpose.
For a more detailed network analysis, two monitor jacks (Monitor M1 and M2) are available for feedback-free connection of an analysis tool (e.g. PNINspektor® NT or laptop).

Specifications

- Input voltage: 24V DC
- Tolerance: 10%
- Max. power consumption: 150mA
- Max. power loss: 4W
- Output voltage: 24 V DC (max. 1A)
- Operating temperature: +5 °C to +55 °C
- Storage temperature: -15°C to +75°C
- Air humidity: 10 to 90 %, non-condensing
- Dimensions (H x W x D): 105 x 49 x 92 mm, incl. top-hat rail mounting and connector terminals
- Mounting: TS35 DIN top-hat rail (EN 50022)
- Weight: 0.345 kg
- Protection class: IP20
- Network port: RJ45

Note on connection

To connect the PROFINET-INspektor® NT via an iPNMA, only patch cables are needed. In case of a power supply failure of the iPNMA, the PROFINET communication via the iPNMA remains intact. For power supply of additional analytic tools, the UOUT (24VDC) connector is available.

Note on the PROmanage® NT licence

For integrating the intelligent PROFINET measuring point into the PROmanage® NT software, 16 licensed ports are required for each iPNMA.

Ordering details	Art. No.
Intelligent Measuring Point iPNMA	114090200

Intelligent Measuring Point iPNMA

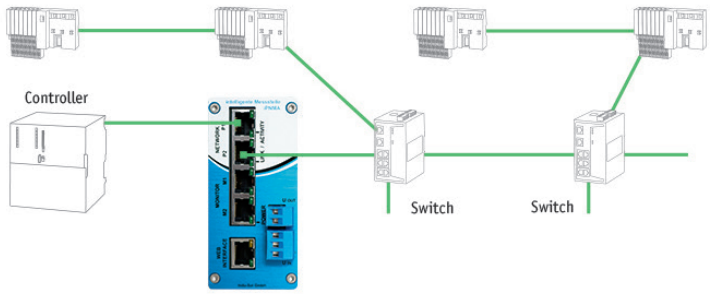

Example of application

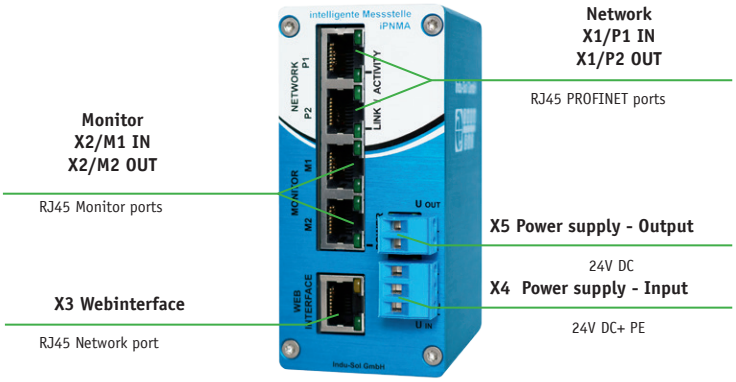

Device ports

PROFINET Switch PROmesh P9

Function

The Indu-Sol **PROFINET Switch PROmesh P9** is the first Full-PROFINET Switch that is equipped for the increased performance requirements in the PROFINET and conforms to Conformance Class B requirements. This functionality makes it possible to integrate the switch into the automation system (Step7, TIA Portal) by an engineering tool in order to make a comprehensive network diagnostics feasible.

With its optimised shielding contacts in the RJ45 jacks and leakage current monitoring, the PROmesh series not only meets the requirements for PROFINET functionality but also fulfils highest demands for EMC resistance in the industrial environment. That is why is can also be employed in areas with heavy electro-magnetic loads.

In addition, many useful management functions such as IGMP snooping, VLAN, QoS, SNMP, bandwidth management and alerts via email or relay output can be used. The switch has 4 priority queues per port.

Technical data

- Input voltage: 24V DC +-20%, redundant power supply
- Max. Power consumption: 800 mA
- Max. power loss: 8 W
- Dimensions (H x W x D): 105 x 49 x 112 mm
- Weight: 490 g
- Casing: aluminium, anodised
- Storage temperature: -40°C to +85°C
- Operating temperature: 0°C to +55°C
- Protection class: IP20
- Mounting: TS35 DIN top-hat rail

Features

- Network port: 9 x 10/100Base-TX RJ45-Ports
- Technology: Store und Forward
- Monitoring of leakage current: Sampling rate 25KHz range 0 - 10A
- Display of netload with millisecond accuracy
- Supported protocols: MRP-Master, MRP-Client, DCP, I&M, DHCP, IGMP, LLDP, PDEV, QoS, RSTP, STP, SMTP, SNMP, SNTP, VLAN
- Port Mirror: only TX packets or TX and RX packets
- Alert: PN-RTA, SNMP, email, relay
- Bandwidth control

Ordering details	Art. No.
PROFINET Switch PROmesh P9	114110020

PROFINET Switch PROmesh P9

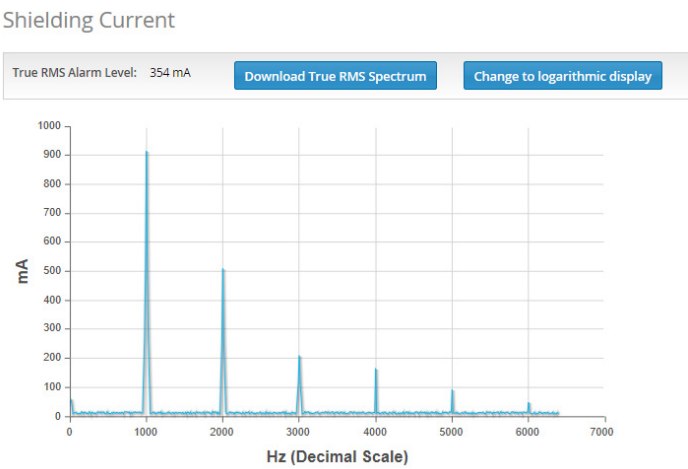

Monitoring of leakage current

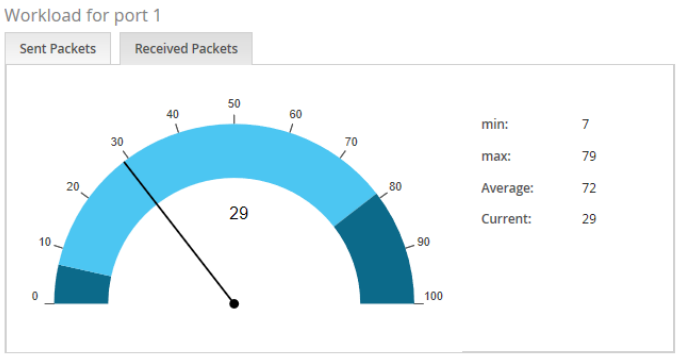

Display of netload with millisecond accuracy

BLUambas® PROFINET

Function

The wireless system **BLUambas®** provides wireless data transmission in the fieldbus system PROFINET. Herewith mobile plant components or machines can be integrated simply into the system communication. For this reason BLUambas® is the perfect alternative for slip rings and trailing cables but without mechanic wear. As seen from the perspective of the controller the wireless system acts like a cable.

Instructions for use

PROFINET Wireless provides for all update rates starting with 1 ms. To build up a wireless PROFINET system one BLUambas® master module and at least one BLUambas® slave module are required. The maximum number of slave modules and PROFINET I/O devices depends on the BLUambas® types. Each BLUambas® PROFINET module can be configured as a master module as well as a slave module.

BLUambas® is available with protection class IP20 or IP65 and can be freely selected within a radio link.

Variants

BLUambas® PROFINET Classic

A PROFINET radio link can be established between a master module and a maximum of one slave module. A maximum of four PROFINET IO devices can be installed behind the radio link.

BLUambas® PROFINET Comfort

A PROFINET radio link can be established between a master module and a maximum of four slave modules. A maximum of six PROFINET IO devices can be installed behind the radio link.

BLUambas® PROFINET Premium

A PROFINET radio link can be established between a master module and maximum four slave modules. A maximum of six PROFINET IO devices can be installed behind the radio link. In addition PROFIsafe communication is transmitted.

Technical data

BLUambas® PROFINET:

- Transmission standard: IEEE 802.15.1 (Bluetooth)
- Transmission frequency: 2,4-2,4835 GHz
- Range indoor: 100m (depending on antenna)
- Range outdoor: 300m (depending on antenna)
- Antenna connection: SMA socket
- PN refresh rate: ≥1ms
- Temperature range: -20°C to 60°C
- Protocols: Ethernet 100 MBit

Version protection class IP 20:

- Installation: Top-hat rail
- Housing (H x W x D): 105 x 23 x 125 mm
- Voltage supply: 24 V DC, 2 W, terminal
- PROFINET interface: 2 x RJ45

Version protection class IP 65:

- Installation: 4 holes screw fastening
- Housing (H x W x D): 121 x 88 x 42 mm
- Voltage supply: 24 V DC, 2 W, M12 A coding
- PROFINET interface: M12 D coding

BLUambas® PROFINET IP20

BLUambas® PROFINET IP65

Ordering details	Art. No.
BLUambas® PN Classic master/slave module IP20	125100200
BLUambas® PN Classic master/slave module IP65	125100201
BLUambas® PN Comfort master/slave module IP20	125100202
BLUambas® PN Comfort master/slave module IP65	125100203
BLUambas® PN Premium master/slave module IP20	125100204
BLUambas® PN Premium master/slave module IP65	125100205
Accessories	
Rod antenna	125100015
Dome antenna	125100032

Other antennas on request!

PROFINET cable Cat 5, type A, solid

Function

For a PROFINET network in an industrial environment only shielded cabling and connecting elements are permissible. Industry-suitable cables can be exposed to extremely mechanical load requiring a special structure. Plug-and-socket connectors and cables from a well-coordinated system. Only those elements that have proven their compatibility are called PROFINET units.

Wires

- Copper strand: Ø 0,64 mm
- PE insulation: Ø 1,5 mm
- Wire colours: Yellow, orange, white, blue

Shielding

- Shield braid made of tinned copper wires
- Aluminum foil overlapping

Electrical properties at 20°C

- Loop resistance per lenth: ≤ 115 Ohm / km
- Signal term: ≤ 5,3 ns/m
- Insulation resistance: ≥ 500 MOhm *km
- Char. impedance (1-100 MHz): 100 ±15 Ohm
- Transfer impedance (10 MHz): ≤ 10 mOhm/m
- Test voltage (Wire/Wire/Screen rms 50 Hz 1 Min.): 2000 V
- Electrical requirements according to EN 50288-2-1

Mechanical and thermal data

- Diameter
  - Inner conductor: Ø 0,64 mm
  - AWG cross section: AWG22
  - Core insulation: Ø 1,5 mm
  - Inner sheath of cable: Ø 0,9 mm
  - Cable sheath: Ø (6,5 ± 0,2) mm
- Conductor material according to DIN EN 13602 Cu-ETP-A ...
- Shield material according to DIN EN 13602 Cu-ETP-A ...- B
- Insulation material according to DIN EN 50290-2-23 (VDE 0819), table L/MD (HD 624,3)
- Jacket material according to DIN EN 50290-2-22 (VDE 0819), connection type TM52 (HD 624,2)
- Of low flammability according to IEC 60332-1-2; UL 1685 (CSA FT 4)
- UL-File E119100 Vol.1 Sec.12 Site 1; UL-File E352715 Vol.1 Sec. 1 S. 2 confirmed CAT 5E; UL-File E116441 Vol.1 Sec. 6 S. 8; UL-File E306668 Vol.1 Sec. 3 S. 1; UL-Style 21694

General data

- RoHS compliant (directive 2011/65/EG)
- Sunlight resistance according to UL 1581 Sec.1200
- Limited oil resistance
- Tractive force: ≤ 150 N
- Temperature range: -40°C bis +75°C
  - Storage: -20°C bis +60°C
  - Transport: -40°C bis +75°C
- Bending radius:
  - Bending radius for repeated usage: 7,5 x Ø
  - Bending radius for single usage: 3 x Ø
- PVC weight with Phthalat: 30,4 kg/km
- PVC weight with Phthalat: 0,0 kg/km
- Weight: Ca. 66 kg/km

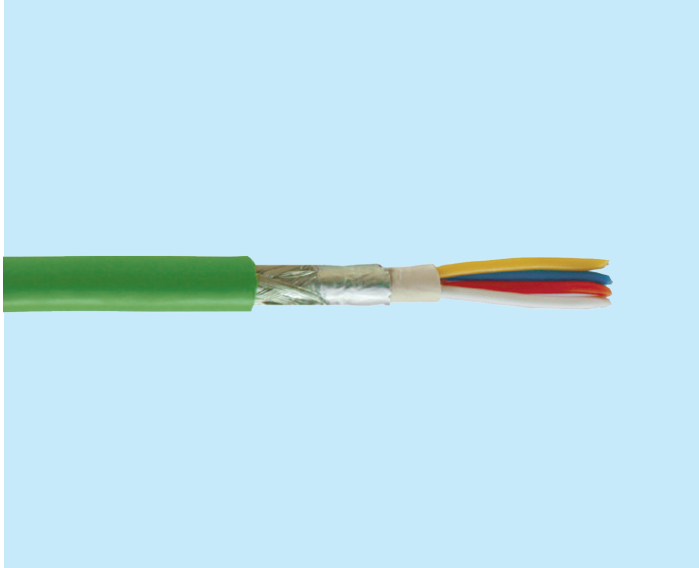

PROFINET Cable Cat 5, solid

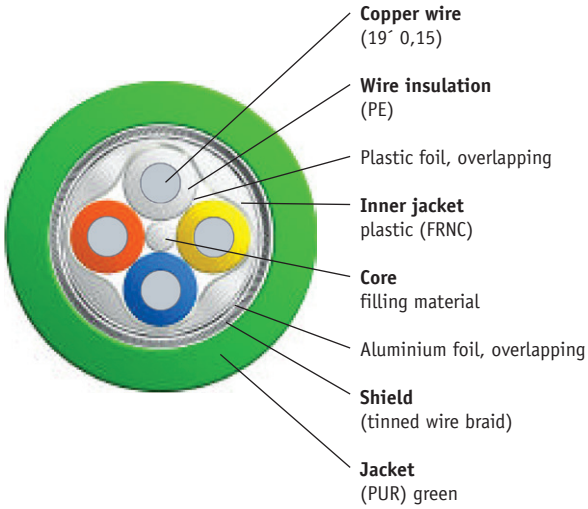

Engineering drawing

Ordering details	Art. No.
PROFINET cable Cat 5, type A, solid*	114050010

*) length on request

PROFINET cable Cat5 type B, flexible

Function

For a PROFINET network in an industrial environment only shielded cabling and connecting elements are permissible. Industry-suitable cables can be exposed to extremely mechanical load requiring a special structure. Plug-and-socket connectors and cables from a well-coordinated system. Only those elements that have proven their compatibility are called PROFINET units.

Wires

- Copper strand: 7 x 0,25 / Ø 0,75 mm
- PE insulation: Ø 1,5 mm
- Wire colours: Yellow, orange, white, blue

Shielding

- Shield braid made of tinned copper wires
- Aluminum foil overlapping

Electrical properties at 20°C

- Loop resistance per lenth: ≤ 115 Ohm / km
- Signal term: ≤ 5,3 ns/m
- Insulation resistance: ≥ 500 MOhm *km
- Char. impedance (1-100 MHz): 100 ±15 Ohm
- Transfer impedance (10 MHz): ≤ 10 mOhm/m
- Test voltage (Wire/Wire/Screen rms 50 Hz 1 Min.): 2000 V
- Electrical requirements according to EN 50288-2-1

Mechanical and thermal data

- Shield material according to DIN EN 13602 Cu-ETP-A ...- B
- Insulation material according to DIN EN 50290-2-23 (VDE 0819), table L/MD (HD 624,3)
- Jacket material according to DIN EN 50290-2-22 (VDE 0819), connection type TM52 (HD 624,2)

- Of low flammability according to UL 1685 (CSA FT 4)
- Oil-resistant according to IEC 60811-404 (4 hours/70°C)
- UL-File E119100 Vol.1 Sec.12 Site 1; UL-File E116441 Vol.1 Sec. 6 S. 8; UL-Style 21694

General data

- Sunlight resistance according to UL 1581 Sec.1200
- Temperature range: -40°C bis +75°C
  - Storage: -20°C bis +60°C
  - Transport: -50°C bis +80°C
- Bending radius:
  - Bending radius for repeated usage: 7 x Ø
  - Bending radius for single usage: 3 x Ø
- PVC weight with Phthalat: 30,9 kg/km
- PVC weight with Phthalat: 0,0 kg/km
- Weight: Ca. 68 kg/km

Ordering details	Art. No.
PROFINET cable Cat 5 type B, flexible*	**114060001**

*) length on request

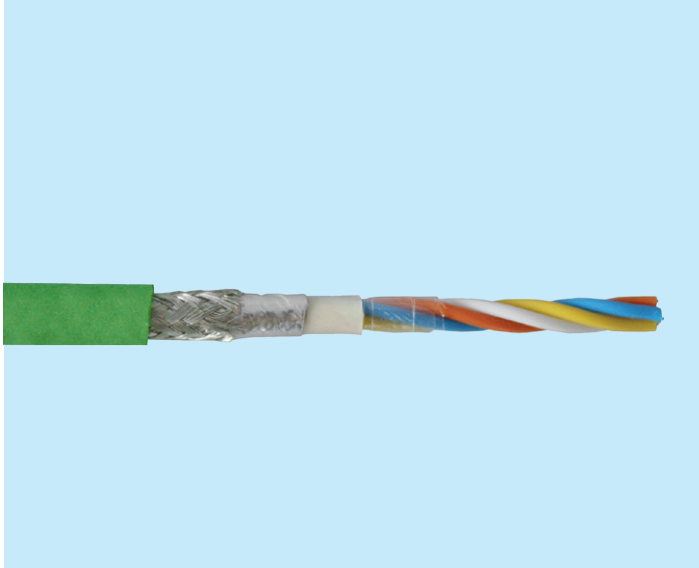

PROFINET cable Cat5 type B, flexible

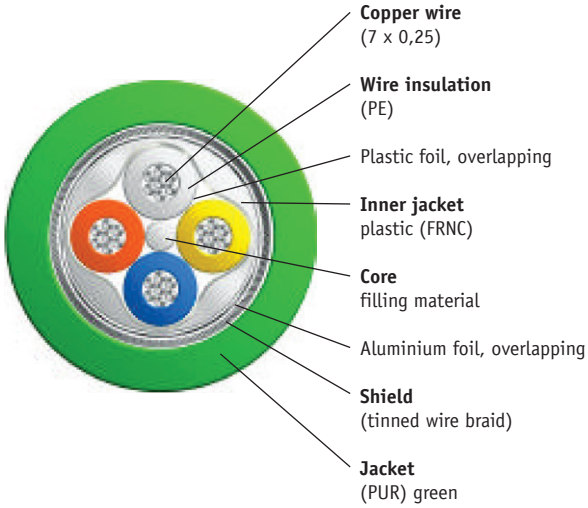

Engineering drawing

PROFINET cable Cat 5, type C, drag chain capable

Function

For a PROFINET network in an industrial environment only shielded cabling and connecting elements are permissible. Industry-suitable cables can be exposed to extremely mechanical load requiring a special structure. Plug-and-socket connectors and cables from a well-coordinated system. Only those elements that have proven their compatibility are called PROFINET units.

Wires

• Copper strand:	Fine wire conductors of bare copper wires (in according to EN 60228) 4 x 0,38 /Ø 7 mm
• Aderisolation:	Mechanically high-quality TPE mixture
• Wire colours:	Yellow, orange, white, blue

Electrical data

• Char. impedance:	100 Ohm ±15 Ohm, acc. to DIN EN 50289-1-11
• Copper number:	35 kg/km
• Nominal voltage:	50 V
• Test voltage:	500 V (wire/wire), 500 V (wire/shield) acc. to DIN EN 50289-1-3
• Operating capacity:	Ca. 53pF/m (bei 800 Hz), acc. to DIN EN 50289-1-5

General data

• For medium load requirements	
• PUR outer jacket	
• Protective conductor:	Without protective conductor
• Shieled:	Yes
• Oil-resistant according to DIN EN 50363-10-2	
• Coolant-resistant:	Yes
• Notch toughness:	Yes
• PVC and halogen-free:	Acc. to EN 50267-2-1
• Flame-retardant:	Acc. to IEC 60332-1, CEI 20-35, FT1, VW-1
• Hydrolysis resistance:	Acc. to DIN VDE 0282 Teil 10-A
• Microbe resistance:	Acc. to DIN EN 50396
• Weight:	Ca. 66 kg/km
• Bending radius:	Mind. 6,8 x d
• Temperatu range:	-25°C to +80°C

Ordering details	Art. No.
PROFINET cable Cat 5 type C, drag chain capable*	**114070001**

*) length on request

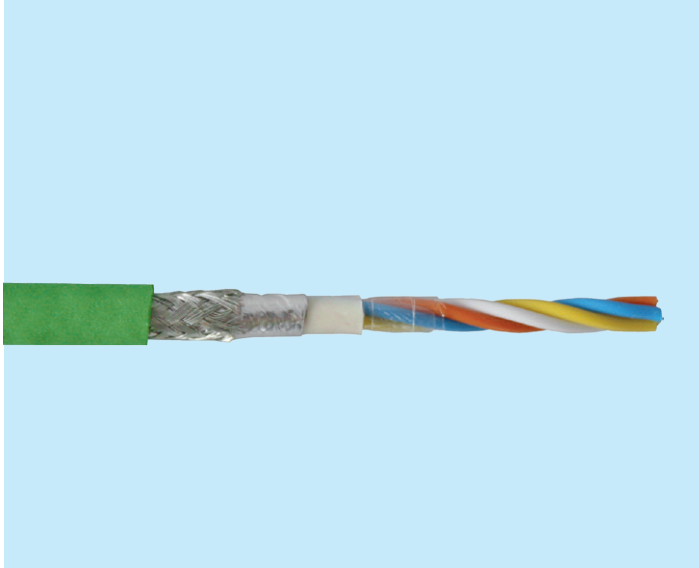

PROFINET cable Cat5 type C, drag chain capable

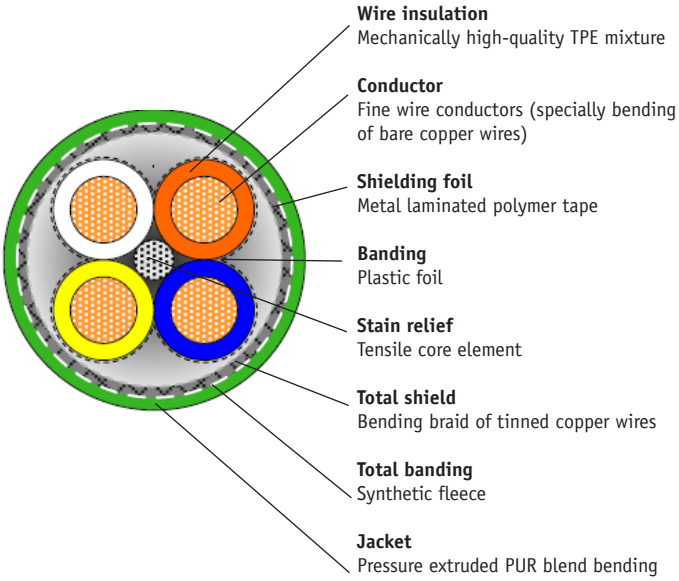

Engineering drawing

PROFINET cable Cat5 Typ A, solid +FE

Function

The **+FE PROFINET cable** is a flexible data cable for transmission of analog and digital signals on cabling according to PROFINET standard in industrial environments. The double shield braiding ensures maximum shielding values.

Standards

- EN 50288-2-1; EN 50173; ISO/IEC 11801 2. edition ; IEC 61156-5; PROFInet Draft
- EN 60332-1; UL 444 CMX/CMH

Application

- IEEE 802.3: Ethernet 10Base-T; Fast Ethernet 100Base-T; Gigabit Ethernet 1000Base-T
- IEEE 802.5: ISDN; FDDI; ATM

Aufbau

• Conductor:	Cu AWG 22/1, bare
• Insulation:	PE
• Diameter:	1,48 ± 0,02 mm
• Stranding:	Sternvierer
• Inner jacket:	Spezial PVC
• Shielding total:	Plastic laminted Aluminium foil
• Inner screen:	Copper, wire 0,10
• Outer screen:	Copper, wire 0,10 Opt. coverage > 85%
• Screen section:	> 1,5 mm²
• Carrying capacity: (outer screen):	max. 10 A
• Jacket:	Spezial PVC
• Colour:	Green, RAL 6018
• Diameter:	6,9 ± 0,2 mm

Electrical data

• Loop resistance:	Max. 120 Ohm/km according to VDE 0812
• Insulation resistance:	Min. 5 GOhm x km at +20°C
• Operating capacity:	Nom. 50nF/km
• Char. impedance at 1000 MHZ:	100 Ohm ± 5Ohm
• Test voltage:	700 V/DC
• Velocity of propagation:	ca. 0,67 c
• Signal term:	max. 510 ns/100m
• Running time difference:	< 25ns/100m
• Screen attenuation:	> 85 dB
• Couling attenuation:	> 95 dB
• Transfer impedance:	< 10 mOhm/m at 1 MHz < 10 mOhm/m at 10 MHz < 30 mOhm/m at 30 MHz

Mechanical and thermal data

• Max. tractive force:	120 N
• Bending radius:	10 x diameter during installation 5 x diameter fixed
• Temperatur range:	
fixed:	-30°C to +75°C
during installation:	0°C to +50°C

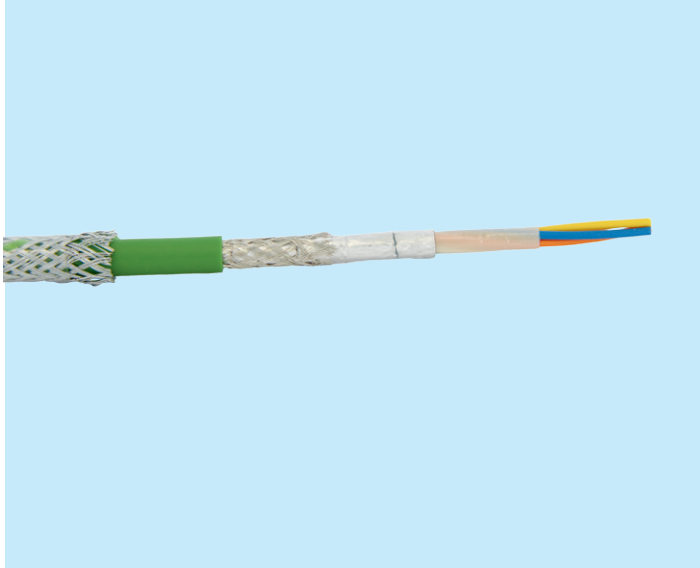

PROFINET-Cable Cat5 Typ A, solid +FE

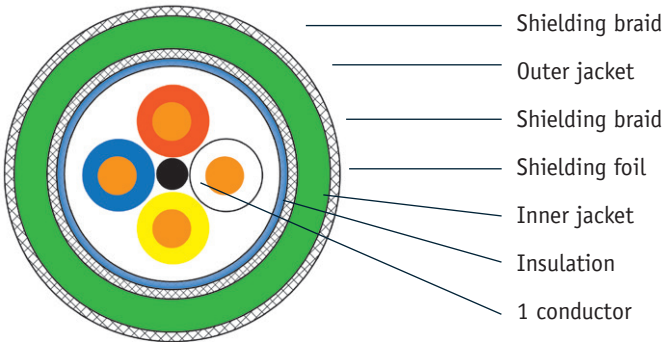

Cross section PROFINET-Cable Cat5 Typ A, solid +FE

Ordering details	Art. No.
+FE PROFINET-Cable solid	114050011

PROFINET cable Cat5 type B, flexible +FE

Function

The **+FE PROFINET cable** is a flexible data cable for transmission of analog and digital signals on cabling according to PROFINET standard in industrial environments. The double shield braiding ensures maximum shielding values.

Standards

- EN 50288-2-2; EN 50173; ISO/IEC 11801 2. edition; IEC 61156-5; PROFInet Draft
- EN 60332-1; UL 444 CMX/CMH

Applications

- IEEE 802.3: Ethernet 10Base-T; Fast Ethernet 100Base-T; Gigabit Ethernet 1000Base-T
- IEEE 802.5: ISDN; FDDI; ATM

Construction

• Conductor:	Cu AWG 22/7, tinned
• Insulation:	PE
• Diameter:	1,54 ± 0,02 mm
• Stranding:	Quad
• Inner jacket:	Spezial PVC
• Shielding total:	Plastic laminted Aluminium foil
• Inner screen:	Copper, wire 0,10
• Outer screen:	Copper, wire 0,10 Opt. coverage > 85%
• Screen section:	> 1,5 mm²
• Carrying capacity: (outer screen):	max. 10 A
• Jacket:	Spezial PVC
• Colour:	Green, RAL 6018
• Diameter:	7,0 ± 0,2 mm

Electrical data

• Loop resistance:	Max. 120 Ohm/km according to VDE 0812
• Insulation resistance:	Min. 5 GOhm x km at +20°C
• Operating capacity:	Nom. 50nF/km
• Char. impedance at 1000 MHZ:	100 Ohm ± 5Ohm
• Test voltage:	700 V/DC
• Velocity of propagation:	ca. 0,67 c
• Signal term:	max. 510 ns/100m
• Running time difference:	< 25ns/100m
• Screen attenuation:	> 85 dB
• Couling attenuation:	> 95 dB
• Transfer impedance:	< 10 mOhm/m at 1 MHz < 10 mOhm/m at 10 MHz < 30 mOhm/m at 30 MHz

Mechanical and thermal data

• Max. tractive force:	120 N
• Bending radius:	10 x diameter during installation 5 x diameter fixed
• Temperatur range:	
fixed:	-30°C to +75°C
during installation:	0°C to +50°C

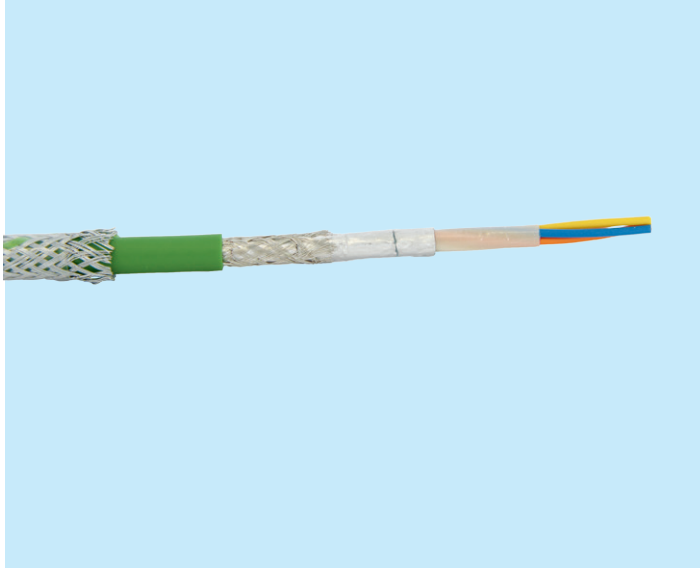

PROFINET-Cable Cat5 Typ B, flexible +FE

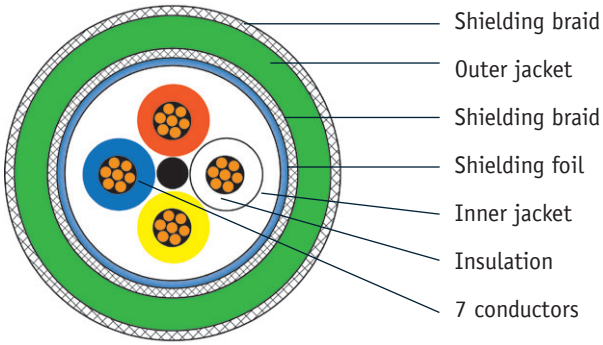

Cross section PROFINET-Cable Cat5 Typ B, flexible +FE

Ordering details	Art. No.
+FE PROFINET cable flexible	114060003

Control cabinet bushing SSD EMC

Function

With the **control cabinet bushing SSD EMC** for front mounting in control cabinets and terminal boxes you provide an easy and optimal access to your control cabinet by RJ 45. A 10cm flat belt (copper mesh tape) provides a better discharge of high-frequency shield currents in the range of 20-25 kHz. This guarantees a greater protection of devices against shield currents.

Environmental conditions

- Industrial protection: IP65, IP67
- Operating temperature: -25 °C to +85 °C

Electrial data

- Rated voltage: 50 V
- Rated current: 1 A
- Transmission proterties: CAT5 (IEC 11801:2002), CAT5e (TIA 568B:2001)

Design

- Colour: Silver
- Installation: Hole of Ø $17^{+0,1}$
- Connector: RJ45 and M12

Dimensions inside of control cabinet

- Height: 36 mm
- Width: 33 mm
- Depth: 24 mm

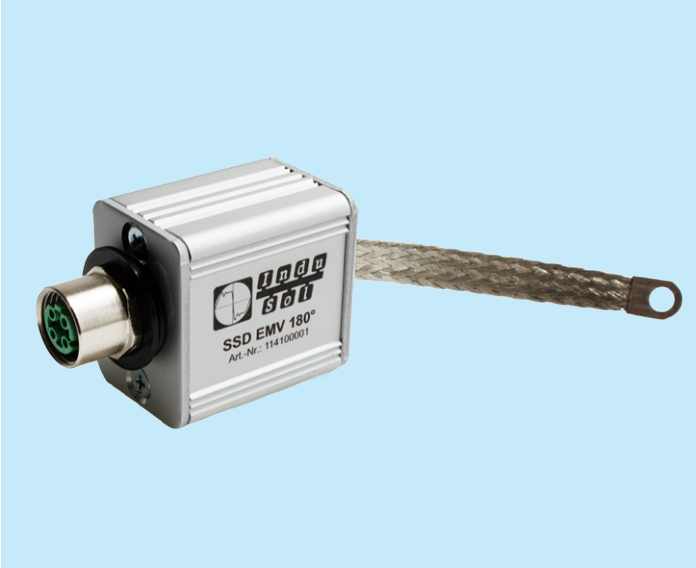

Control cabinet bushing SSD EMC

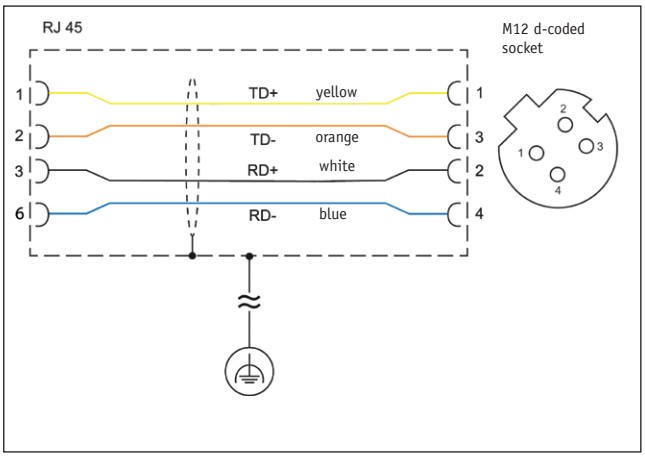

Functional diagram

Ordering details	Art. No.
Control cabinet bushing SSD EMC	114100001

Control cabinet bushing SSD

Function

With the **SSD bushing** for front mounting in control cabinets and terminal boxes you provide an easy and optimal access to your control cabinet by RJ 45 or USB.
According to the Ethernet and USB interfaces SPC and measuring point (ETMA) can be easily accessed from outside.

Connections

The SSD control cabinet bushing is available in two versions with connection for:

- Version 1 2 x RJ45
- Version 2 USB ad RJ45

Electrical parameters

- Max. rated voltage / rated current: RJ45 - 48 VAC/DC / 1 A
  USB - 30 VAC/DC / 1 A
- Interlocking type: RJ45 - locking hook
  USB - snap-in
- Specification: RJ45 CAT5e;
  USB 2.0 / Type 2

Electrial parameters - mains socket-outlet

• Norm:	D VDE	USA NEMA	F UTE
• Rated voltage (max.):	250 V AC	125 V AC	250 V AC
• Frequency:	50 Hz	60 Hz	50 Hz
• Rated current (max.):	16 A	15 A	16 A

- Others on request

Ambient conditions

- Industrial protection: IP64

Design

- Dimensions (H x W x D): SSD-E: 113 x 66 x 35 mm (single)
  SSD-D: 113 x 130 x 35 mm (double)
- Frame: Metal
- Lid: Design: metal, black varnish

Control cabinet bushing SSD

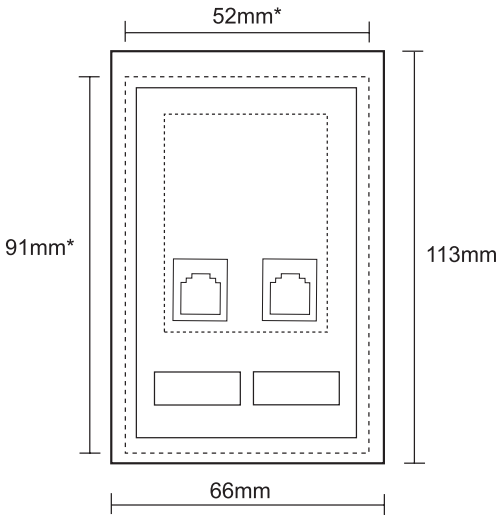

Ordering details	Art. No.
SSD-E RJ45 (single, 2 x RJ45)	**110060005**
SSD-D RJ45 (double with socket-outlet German, 2 x RJ45)	**110060003**
SSD-B RJ45 (double w. customized. mains socket-outlet, 2 x RJ45	**110060002**
SSD-E USB (single, 1 x USB + 1 x RJ45)	**110060007**
SSD-D USB (double w. socket outlet German, 1 x USB + 1 x RJ45)	**110060004**
SSD-B USB (double w. customized mains socket-outlet, 1 x USB + 1 x RJ45)	**110060001**

Connector RJ45 Fast Connect Plug 180°/90°

Function

The **RJ45 Fast Connect Plug 180°/90° Plug** allows for the connection of different PROFINET components with each other or to end devices, e.g. a PROFINET station to a PROFINET cable. A single connection can be up to 100 m in length. The contact elements have colour markings to simplify connection and avoid mistakes. After connection, a visual check can be done. The plug is used for data transfer rates of up to 100 Mbps.

Application

The plug is available as a straight or elbow version. Thanks to the rugged metal housing and the RJ45 Fast Connector the plug is suitable for industrial use.

Technical data RJ45 Fast Connect Plug 180°

- Number of electrical connections: for IE FC TP lines -4; for network components/devices - 1
- Wiring check: Visual
- Contact Elements: Colour-coded, help to avoid connection errors
- Fast Connect: Yes
- For IE FC TP lines: Integr. insulation displacement contacts
- For network/devices: RJ45-Connector
- Transmission with Cat5e: 100 MBit/s
- Transmission rate: Max. 100 Mbit/s
- Storage temperature: -40 to +80 °C
- Ambient temperature: -20 to +70 °C
- Permissible humidity Max. 95 %
- Housing: Industrial-suited metal housing
- Weight: Approx. 30 g
- Dimensions (H x W x D): 56,5 x 16,4 x 14,0 mm
- Industrial protection: IP20

Technical data RJ45 Fast Connect Plug 90°

- Number of electrical connections: for IE FC TP lines -4; for network components/devices - 1
- Wiring check: Visual
- Contact Elements: Colour-coded, help to avoid connection errors
- Fast Connect: Yes
- For IE FC TP lines: Integr. insulation displacement contacts
- For network/devices: RJ45-Connector
- Transmission with Cat5e: 100 MBit/s
- Transmission rate: Max. 100 Mbit/s
- Storage temperature: -40 to +80 °C
- Ambient temperature: -20 to +70 °C
- Permissible humidity: Max. 95 %
- Housing: Industrial-suited metal housing
- Weight: Approx. 35 g
- Dimensions (H x W x D): 43,5 x 40,5 x 16,2 mm
- Industrial protection: IP20

Ordering details	Art. No.
Connector RJ45 Fast Connect Plug 180°	114030003
Connector RJ45 Fast Connect Plug 90°	114030004

Connector RJ45 Fast Connect Plug 180°

Connector RJ45 Fast Connect Plug 90°

RJ45/8A Cat 6A Plug, configurable

Function

The **RJ45/8A Cat 6A plug** can be used for PROFINET applications and for transmission rates of up to 10 Gbps. The connector is equipped with insulation-displacement contacts, which means that no special tools are required for configuration. It can be used with PROFINET, Standard Ethernet and Ethernet Installation cables. The connector is fully shielded and suitable for industrial application in harsh conditions.

Technical data

- Transmission characteristics: Cat 6A according to ISO/IEC 11801
- Protection class: IP20
- Stranded conductor core connection: AWG 27/7 – 22/7
Core diameter
0.46 mm – 0.76 mm
- Full core connection: AWG 26/1 – 22/1
Core diameter
0.4 mm – 0.64 mm
- Configuration: Insulation-displacement contacts
No special tools required for connection
- Operating temperature: -40°C to +85°C
- Jacket diameter: 5.5 mm to 10.5 mm
- Cycles of operation: 750 min.
- Casing material: Die-cast zinc

Pin assignment

Pin number	T568A	T568B	Industrial
1	WH-GN	WH-OG	YE
2	GN	OG	OR
3	WH-OG	WH-GN	WH
4	BU	BU	-
5	WH-BU	WH-BU	-
6	OG	GN	BU
7	WH-BN	WH-BN	-
8	BN	BN	-

CE mark

Plugs are passive components and are not subject to the CE mark system pursuant to EU Directives.

RJ45/8A Connector Cat 6A

Sample application

Ordering Details	Art. No.
RJ45/8A Stecker Cat 6A, 180°	112030008
RJ45/8A Stecker Cat 6A, 360°	112030009

Round plug connector IE Fast Connect Plug PRO M12 (D-coded)

Use

The customizable connectors are used to connect the Ethernet and PROFINET cable to the device or as coupling in rough environments.

How to use

The customizable M12x1 connectors permit an easy on-site assembly. The connectors for Ethernet / PROFINET are 4-pole types, D-coded. The shield is contacted through the connector housing. The connectors have a shielded metal housing.

Bus connection

- M12 (d-coded)
- Fast Connect
- Axial (180°)
- Transfer speed: 10/100 MBit/s

Electrical parameters

- Transfer speed: 10 / 100 Mbps
- Number of electrical connections: For IE FC TP Lines - 4
  For Network components - 1
  For Devices - 1
- Electrical connections: For IE FC TP integrated insulation displacement contacts for 4-wire TP FC installation lines
  for Netzwork components or devices - M12 connector (D-coded)

Ambient conditions

- Operating temperature: -40°C to +85°C
- Protection type: IP65/67 when connected and screwed (DIN VDE 0470)

Constructive design

- Weight: 40 g
- Housing: Metal
- Dimensions (WxHxD): 19 x 19 x 73 mm
- Contact surface: Brass alloy (CuSnZn)
- Connection cross-section: Max. 0.75 mm²

CE mark

Plugs are passive components and are not subject to the CE mark system pursuant to EU Directives.

Ordering details	Art. No.
Circular connector IE Fast Connect Plug PRO M12 (d-coded)	114030002

Circular connector IE Fast Connect Plug PRO M12 (D-coded)

Sample application (side view)

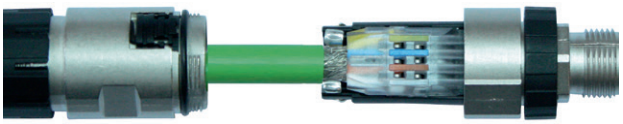

Sample application (view from above)

M12 Stecker

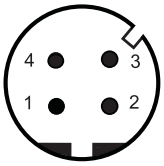

Signal	Designation	Wire color	Assignment	
			RJ45	M12
TD+	Transmission Data +	yellow	1	1
TD-	Transmission Data -	orange	2	3
RD+	Receive Data +	white	3	2
RD -	Receive Data -	blue	6	4

Pin assignment

Notizen

Infrastructure components ASi

Measuring points **114**

Active measuring point ASiMA HS IP67 114
Active measuring point ASiMA IP67 115

Power pack **116**

ASi power pack 4A/4Ae/8A 116

Insulation monitor **117**

ASi insulation monitor 117

Repeater **118**

ASi Repeater IP20 118
ASi tuner incl. bus termination 119

Bus termination **120**

ASi plug 120

Cable **121**

ASi bus cable 121
ASi power cable 122

Active measuring point ASiMA HS IP67

Function

The PG / Service interface is the feedback-free measuring point for measurements with ASi Scope and can also be used as programming interface.
The ASi measuring point is based on a reusable access technology according to IEC 60352-6 and can be used as distribution of connections or connector. Another advantage of the ASiMA HS is the tool-less mounting on the top-hat rail.

Technical data

- Voltage: max. 36 VDC
- Total current: max. 4 A
- Isolation voltage: ASi-Power: 200 V

Contact assignment

- Contact 1: ASi + (brown)
- Contact 2: 0 V (blue)
- Contact 3: ASi - (blue)
- Contact 4: +24 V (brown)
- Contact 5: not used

General data

- Protection type: IP67
- Mounting: to be snapped on top-hat rail or screwed
- Temperature range: -20 to +60 °C (storage temperature -40 to +80 °C)
- Dimensions (HxWxD): 90 x 60 x 40 mm

Ordering details	Art. No.
Active measuring point ASiMA HS	120040001

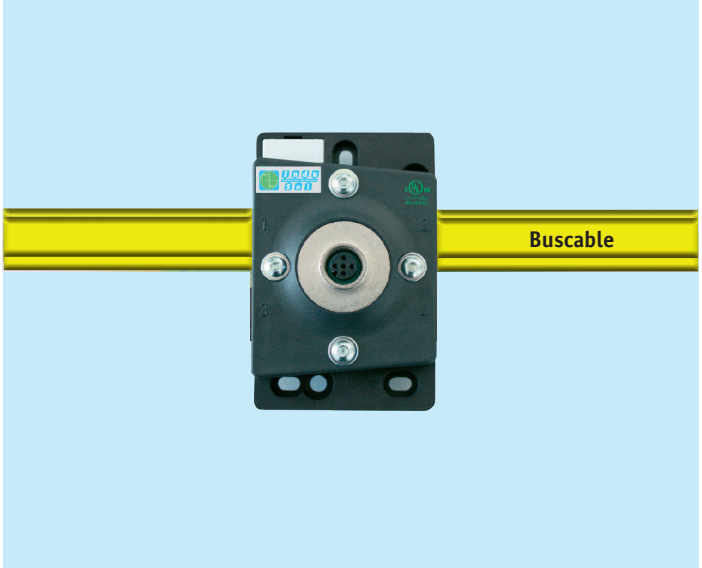

Active measuring point ASiMA HS

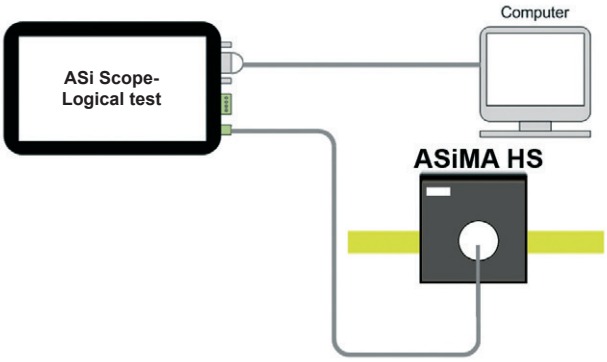

Example of connection

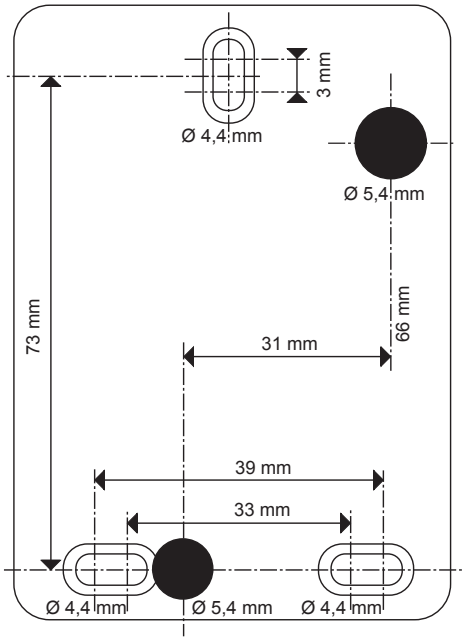

Engineering drawing

Active measuring point ASiMA IP67

Function

The PG / Service interface is the feedback-free measuring point for measurements with ASi Scope and can also be used as programming interface.
The ASi measuring point is based on a reusable access technology according to IEC 60352-6 and can be used as distribution of connections or connector. The ASi connector 0911 ANC 406 is included in the scope of supply.

General data

- Product features: Oil resistance, vibration consistency
- Protective system: IP67
- Casing: PA
- Rated voltage at 40 °C: 4 A

Active measuring point ASiMA

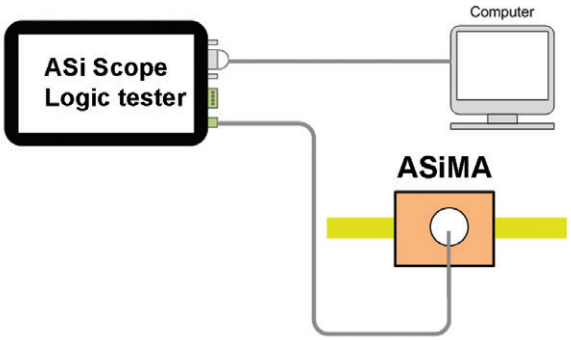

Example of connection

Ordering details	Art. No.
Active measuring point ASiMA	120040000

ASi power pack 4A / 4Ae / 8A

Function

The primary switched power supply is designed for field bus applications transporting energy and data at the same time via a two-wire line. The **power pack** for the ASi supplies a completely removed ASi system with an output current of 4 A and 8 A respectively. The sinusoidal current drain from the network avoids the formation of harmonics. In addition to energy supply the **power pack** has the function of data disconnection to the supply source and balancing of the two ASi output lines towards the machine mass (shield).
Because of the exact and transformer coupling unshielded load lines can be used.

Technical data

	4A	8A
Input		
Power factor	approx. 0,6 (according to input voltage)	
Input frequency	47 - 63 Hz	
Efficiency	approx. 90%	
Voltage range	90 - 265V AC	115/230V AC
Input current	without idle current at 230V DC	
	approx. 0,6A	approx. 1,2A
Input fuse	electronic fuse against external short circuits internal fuse	
Output		
Output Voltage	29,5V - 31,6V DC	
Remaining ripple	according to ASi-Specification	
Output current	4A	8A
Current limitation	ca. 4,5A	ca. 8,5A
Display		
LED green (PWR)	power on (at frontside)	
LED red (Overload)	overload error (at frontside)	
Standard conformity		
Standard	EN 60 950, UL 60 950	
Operating temp.	-10 °C ... +55 °C	
Storage temperture	-40 °C ... +85 °C	
Dimensions (LxWxH)	126 x 70 x 129 mm	141 x 70 x 151 mm

ASi power pack 4 A / 4 Ae / 8 A

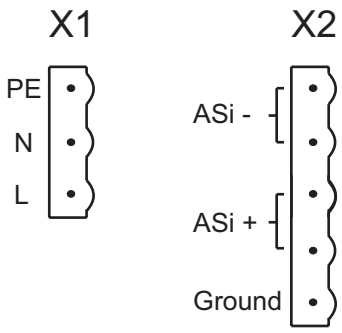

Pin assignment (ASi power pack 4A)

Ordering details	Art. No.
ASi power pack 4 A	120060000
ASi power pack 4 Ae (integrated earth-leakage monitor)	120060001
ASi power pack 8 A	120060002

ASi insulation monitor

Function

Due to the fact that current supply and information run through the ASi cables at the same time, body contact cannot be excluded that may lead to communication failures. To prevent this happening, the insulation monitor monitors the two lines for body contact and signals the same. Both non-symmetrical and symmetrical insulation faults are detected.

Technical data

- Connections: screw terminals up to 0.75 mm²
- Supply voltage: 26.5 to 31.6 VDC
- Operating current: < 40 mA
- Number of required ASi power packs: none
- Display (2 LEDs): LED yellow - function
LED green - operation
- Operating temperature: -25 °C to 60 °C
- Storage temperature: -40 °C to 70 °C
- Industrial protection: IP20
- Insulation voltage: EN 61557-8 (1997)
EN 61326/A2 (2001)
- Dimensions (H x W x D): 74 x 22 x 110 mm

Note

The application range is limited to isolation monitoring in non-earthed ASi and 24 DC voltage networks (IT system). Active symmetrical and passive measuring technique, 2 signalling contacts.
Contact 11/24 is triggered by symmetrical faults and asymmetrical faults.
Contact 11/14 is triggered additionally by asymmetrical faults. The contacts are closed when the ASi voltage is applied and there is no fault.

Ordering details	Art. No.
ASi line insulation monitor	120070001

ASi line insulation monitor

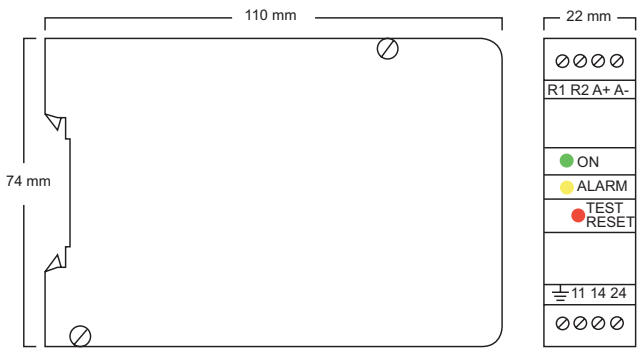

Engineering drawing

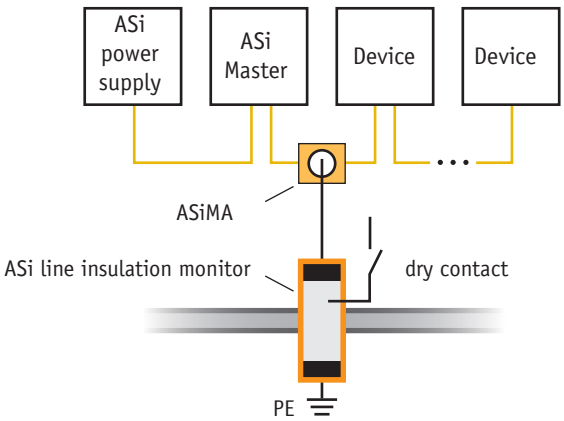

Example of connection

ASi repeater IP20

Function

The ASi repeater with local diagnosis indicates separately ASi communication faults in addition to the voltage supply. The red ASi Fault-LED lights up as long as no ASi communication takes placeThe communication fault LED helps the user to detect basic installation problems within a short period of time. The new ASi repeaters are compatible with all ASi repeaters available on the market.
Especially the IP 20 ASi repeaters can be easily installed in control cabinets or primary switchgear cabinets together with the ASi power pack.

Application

The ASi bus permits a maximum line length of 100 m (incl. all spur lines). If this length is reached, a repeater has to be installed.
The installation of the ASi repeater requires another power pack to be installed in the newly created ASi segment (see installation drawing).

Technical data

• Connections:	Combicon clamp-type terminals
• Supply voltage:	Operating voltage form ASi
• Operating current:	60 mA (per phase segment), 120 mA (total)
• Number of necessary ASi power packs:	one additional power pack (as with every ASi repeater)
• Display (4 LEDs):	1. PWR1 ASi-Power circuit 1 2. FAULT1 ASi communication fault circuit 1 3. PWR2 ASi-Power circuit 2 4. FAULT2 ASi communication fault circuit 2
• Insulation voltage:	≥ 500 V EMC acc. to EN61000-6-3, EN61000-6-2
• Dimensions (L x W x D):	114 x 25 x 1105 mm

Ambient conditions

• Operating temperature:	0 °C to +55 °C
• Storage temperature:	-25 °C to +75 °C
• Industrial protection:	EN 60529 IP20

Note

The ASi repeater takes no slave address. The total number of slaves (31 and 62 resp. per master phase remains unchanged. No parameterization is required.
For the segment created when the repeater is installed an additional power pack will be needed.

Ordering details	Art. No.
ASi repeater IP20	120070005

ASi-Repeater IP20

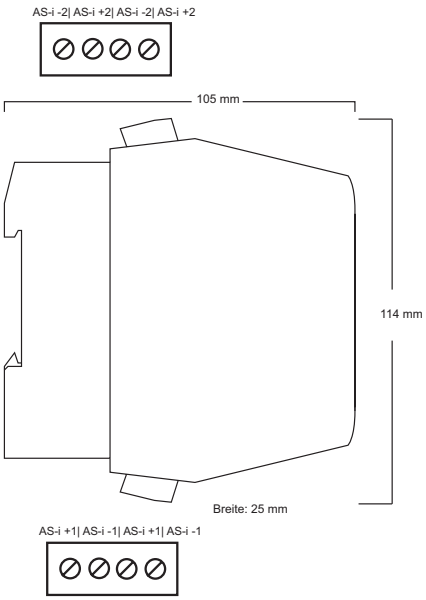

Engineering drawing

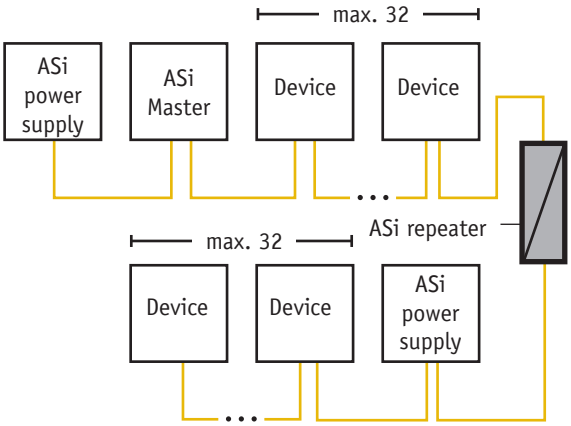

Example of connection

ASi tuner incl. bus termination

Function

The primary task of the **ASi tuner** is the length adjustment in the ASi networks without repeater.
The ASi tuner can be completely switched off by a switch or set to a default. The ASi tuners provide for a stable communication in network of 300 m in length without the need of a repeater and additional power pack. This means a triplication of the ASi line lengths.

Technical data

- Connections: ASi ribbon cable / ASi round cable
- Supply voltage: ASi (30 VDC)
- Operating current: 60 mA
  Display (5 LEDs): LED-Power green voltage OK
  LED green tuning active
  LED red fault (ASi analyzer)
  LED yellow warning (ASi analyzer)
  LED green fault (ASi analyzer)
- EMC: EMc acc. to EN61000-6-3, EN61000-6-2
- Dimensions (H x W x D): 80 x 90 x 43 mm

Ambient conditions

- Operating temperature: 0 °C to +55 °C
- Storage temperature: -25 °C to +75 °C
- Industrial protection: IP65

Meaning of LED

- Description

red	=	severe fault
yellow	=	frequent repeats that should be clarified depending on application
green	=	almost repeat-free communication

Display (5 LEDs): LED-Power lights green = voltage OK
LED-Power is flashing = voltage is low
LED Green is on = communication is OK (ASi analyzer)
LED ERROR lights red = failure (ASi analyzer)
LED WARNING lights yellow = warning (ASi analyzer)

Ordering details	Art. No.
ASi Tuner	120070000

ASi Tuner incl. bus termination

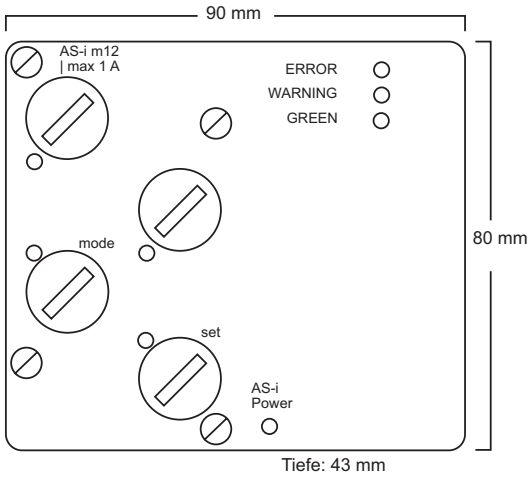

Engineering drawing

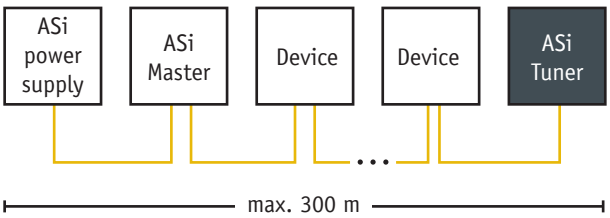

Example of connection

ASi plug

Function

The ASi bus termination allows a doubling of the ASi line length. The passive bus termination allows a line extension up to about 200 m. It is installed at the end of a line. The system will thus become more flexible.

Technical data

- Connections: ASi circular plugs
- Supply voltage: ASi (30 VDC)
- Operating current: 10 mA
- Display (2 LEDs): LED green ASi voltage > 26 V
  LED yellow ASi voltage > 18.5 V
- Dimensions (H x W x D): 19 x 47 mm

Ambient conditions

- Operating temperature: 0 °C to +55 °C
- Storage temperature: -25 °C to +75 °C
- Industrial protection: IP65

ASi plug

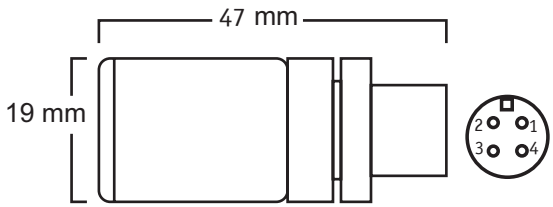

Engineering drawing ASi plug

ASi plug 2

Function

The ASi plug 2 is a slave for the field bus system AS interface. On the one hand it allows to double the ASi line length up to about 200 m and on the other to monitor the supply voltage. The ASi Z plug AI010 serves also to monitor the supply voltage: if the AS-Interface supply voltage is lying within the specified band, the inputs D2 and D3 are set. If the supply voltage is falling under the specified limit the inputs will be resetted. A network supply voltage monitoring is realized.
The ASi bus termination is installed at the end of a line and provides for a greater flexibility of the system.

Technical data

- Connections: ASi circular plugs
- Supply voltage: ASi (20-31,6 VDC)
- Operating current: ≤18 mA
- Display (2 LEDs): LED green ASi voltage > 26 V
  LED yellow ASi voltage > 18,5 V
- Dimensions (H x W x D): 20 x 55 mm

Ambient conditions

- Operating temperature: 0°C to +55°C
- Storage temperature: -25°C to +70°C
- Industrial protection: IP67

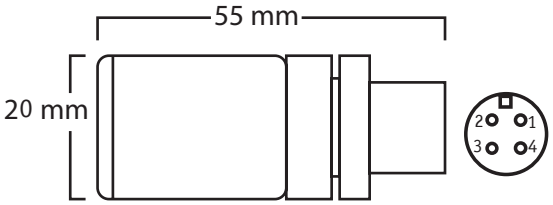

Engineering drawing ASi plug 2

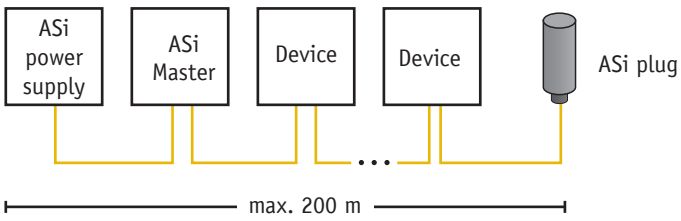

Example of connection

Ordering details	Art. No.
ASi plug	120070003
ASi plug 2	120070004

ASi bus cable

Function

The **ASi bus cable** is a two-core, flat fieldbus line for AS interface (Actuator-Sensor Interface) and network systems of the lower field range. The data for ASi slaves, masters, repeaters, extenders and sensors are transferred through the unshielded, geometrically coded two-wire flat line. The contacting of the conductors is rendered without stripping by means of access technology of the ASi modules.
The line is suitable for permanent installation and flexible use in rooms.

Electrical parameters

- Surge impedance at 167 kHz: 70 - 140 Ohm
- Conductor resistance acc. to VDE 0295 in max.: 27.4 Ohm / km
- Capacity in max.: 80 nF / km
- Inductivity in: 0.5 to 0.75 mH / km
- Volume resistivity: min. 10 Ohm x cm

Design

- Conductor: copper litz wire, tin-plated, 2 x 1.5 mm2, extra finely stranded acc. to VDE 0295, class 6
- Single-wire diameter: 0.16 mm.
- Insulating cover: rubber mixture EM3 acc. to DIN VDE 0207, Part 21, wall thickness 0.5 mm, core diameter: 2.5 mm sheath colour yellow, RAL 1012 sheath colour black, RAL 9005
- Core arrangement: 2 cores in parallel, brown core arranged at the profile nose side

Mechanical and technical properties

- Operating temperature: moved: -30°C to 85°C perman. laid: -40°C to 85°C
- Min. bending radius: moved: 3 x line diameter perm. laid: 6 x line diameter
- Burning behaviour: flame retardant based on IEC 707 VDE 0304, Part 3 FH 2-25
- Allowable pulling force for laying: max. 150 N

Ordering details	Art. No.
ASi bus cable	120050000

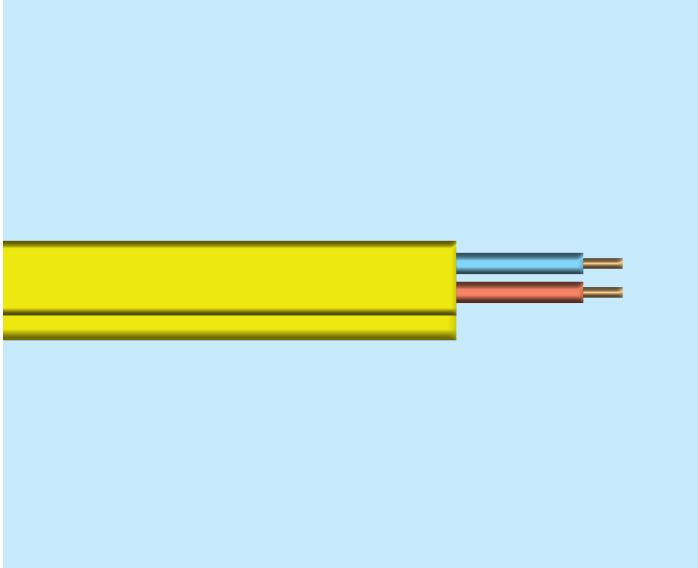

ASi bus cable

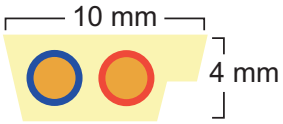

Engineering drawing

ASi power cable

Function

ASi power cables have been specifically developed for industrial automation equipment to supply components, such as pushbuttons, sensors etc. with auxiliary power.
The polarity cannot be exchanged because of the cable structure. Thus, the ASi power cable can be easily and safely connected to the slave interfaces.

Electrical parameters

- Line resistance: 13.7 Ohm / km
- Insulation resistance: 1 MOhm / km
- Operating voltage: max. 300 V

Design

- Conductor: copper litz wire tin-plated, stranded 8.4 x 0.15, dia.: 2.5 mm
- Sheath: thermoplastic elastomer (TPE)
- Colour: black
- Insulating covering: TPE insulation
  wall thickness: approx. 0.5 mm
  core diameter: 2.5 mm

Mechanical and technical properties

- Burning behaviour: flame-retardant acc. to IEC 60332-1-2
- Oil resistance: oil and cutting oil resistant
- Cold bending resistant: depending on IEC 60811-1-4

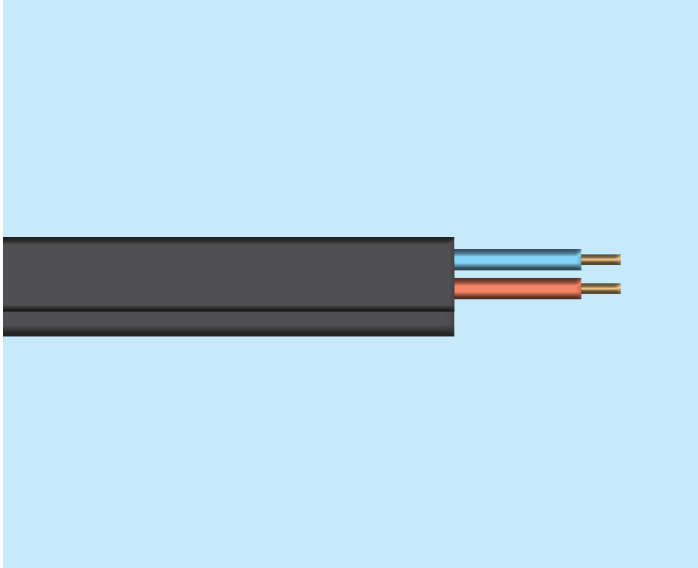

ASi power cable

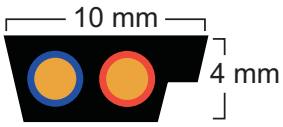

Engineering drawing

Ordering details	Art. No.
ASi power cable	120050001

Infrastructure components CAN/DeviceNet/SafetyBUS p

Measuring points **124**

Active measuring point CBMA IP67 124
Active measuring point DNMA IP68 125

Connector **126**

Circular connector M12 (A coded) 126
Connector PG/90° Screw terminal for CAN 127
Connector Screw terminal axial 128
Connector 90° Screw term with or without PG 129
Connector PG/90° Fast Connect 130

Repeater **131**

CANbridge X2 131

Cable **132**

CAN bus line 132

Active Measuring point CBMA IP67

Function

To determine physically the signal-to-noise ratio of the CAN-/CANopen communication, it is necessary to provide a feedback-free measuring point CBMA in every master system at the segment ends each. The diagnostic tools are connected via the M 12 measuring socket provided at the CBMA.

Bus connection

- M12 (5-pin)

Measuring sockets

- M12 (5-pin)

Technical data

- CAN-applications: CAN, CANopen, DeviceNet, SafetyBUS p
- Baud rate: 9,6 kBps to 1 MBps
- Dimensions (H x W x D)
  T-piece: 45 x 57 x 16,5 mm
  Terminator socket: 56 x 15 x 15 mm
- Casing: plastic
- Fastening: bore holes (Ø 5mm)

Ambient conditions

- Operating temperature: -40 °C to +80 °C
- Industrial protection: IP67

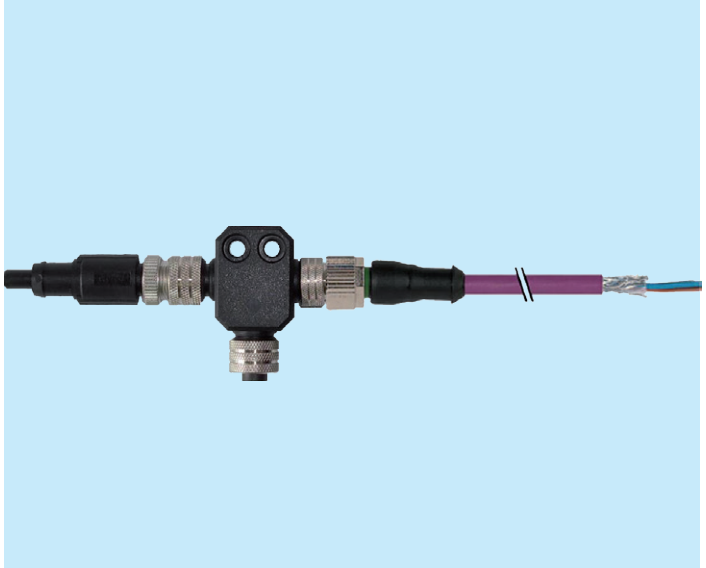

CBMA

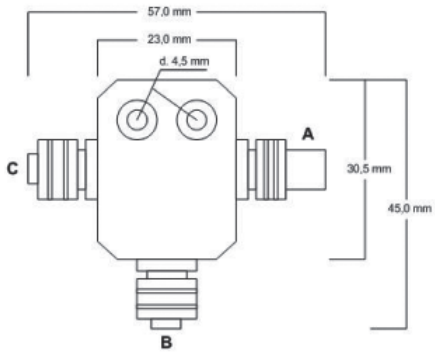

Engineering drawing

A	Bus „in“	Socket 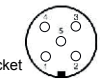	1: Shield 2: V+ (red) 3: V- (black) 4: CAN_H (white) 5: CAN_L (blue)
B	Diagnosis/ Programming interface	Pin	1: Shield 2: V+ (red) 3: V- (black) 4: CAN_H (white) 5: CAN_L (blue)
C	Bus „out“/ Terminating resistor	Pin	

Pin assignment

Ordering details	Art. No.
CBMA set	**119040001**

The CBMA set covers (pre-assembled ready for installation):

1 x active measuring adapter CBMA“
1 x one-sided precut CAN bus line 1.5 m
1 x M12 bus termination
1 x M12 blind plug

CBMA single	**119040000**

Active measuring point DNMA IP68

Function

To determine physically the signal-to-noise ratio of the DeviceNet communication, it is necessary to provide a feedback-free measuring point DNMA in every master system at the segment ends each. The diagnostic tools are connected via the M 12 or 7/8" measuring socket provided at the DNMA.

Bus connection

- 7/8" (5-pin)

Measuring sockets

- M12 (5-pin)
- 7/8" (5-pin)

Electrical parameters

- Current carrying capacity: 8 A (thick)
  4 A (thin)
- Operating voltage: 30 VAC
  36 VDC

Ambient conditions

- Operating temperature: -40°C to +90°C
- Industrial protection: IP68 (Nema 6P)

Design

- Dimensions (H x W x D): approx. 65 x 94 x 29 mm
- Casing: plastic
- Contact: CuZn, nickel sublayer and gold-plated acc. to DeviceNet specification
- Fastening: bore holes (Ø 5mm)

Ordering details	Art. No.
Measuring point DNMA 7/8"	119040002
Measuring point DNMA M12	119040003

DNMA

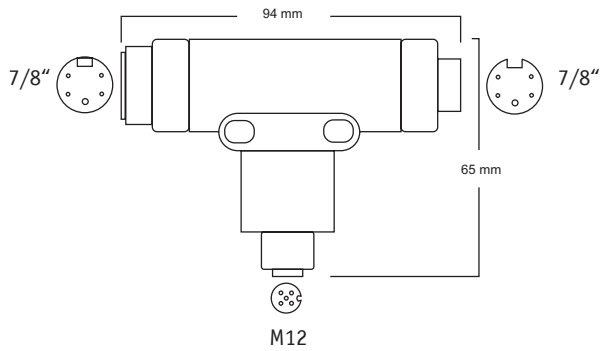

Engineering drawing

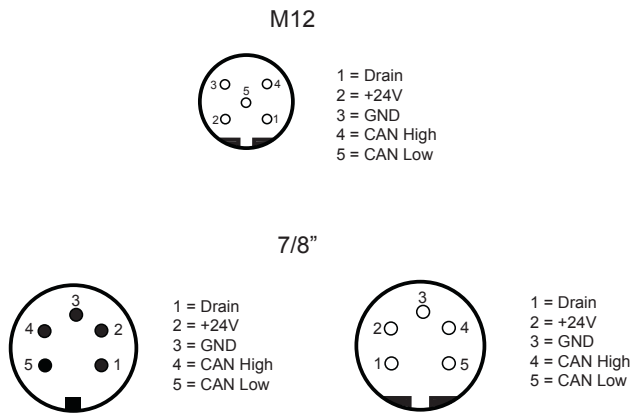

Pin assignment

Circular connector M12 (A-coded)

Function

The convertible plug-and-socket connector (straight, angled) is used for connecting the cable to the CAN users in extremly rough conditions.

Application instruction

The convertible plug-and-socket M12x1 connector allows for an easy on-site installation. The plug-and-socket connectors have a brass casing that can bei shielded.

Bus connection

- M12 (A-coded)
- Screw terminal connection
- Axial or 90° cable outlet

Electrical parameters

• Rated current / contact:	4 A (IEC 60512- 3)
• Rated voltage / contact:	30 VAC, 36 VDC (VDC 0110)

Ambient conditions

• Operating temperature:	-40 °C to +85 °C
• Industrial Protection:	IP67 when plugged and screwed (EN 60529)

Design

• Weight:	straight: 60 g angled: 68 g
• Casing:	brass (CuZn), surface nickel-plated
• Contact surface:	brass alloy (CuSnZn)
• Conductor size:	max. 0,75 mm²

CE mark

Plugs are passive components and are not subject to the CE mark system pursuant to EU Directives.

Ordering details	Art. No.
Circular connector M12 - connector straight	119030002
Circular connector M12 - socket straight	119030003
Circular connector M12 - connector angled	119030004
Circular connector M12 - socket angled	119030005

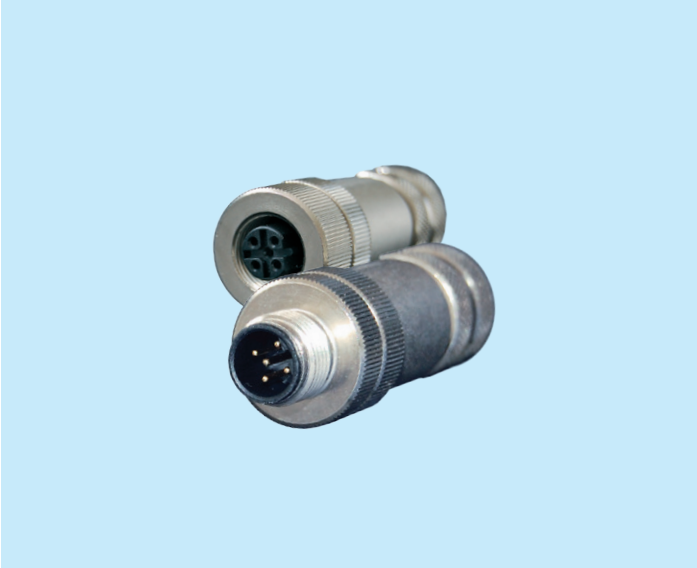

Circular connector M12 (A-coded)

Connector angled

Exploded drawing

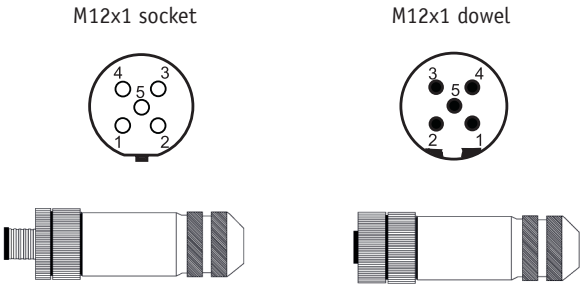

Pin 1: Shield
Pin 2: V+
Pin 3: V-
Pin 4: CAN High
Pin 5: CAN Low

Pin assignment

Connector PG/90° screw terminal

Function

This **connector screw terminal axial** allows for a quick and comfortable connection of incoming and outgoing bus lines. The connector contacts are routed on colour-labeled screw-type terminals. In position ON, the integrated terminating resistor switches off the outgoing segment. When using the screw terminal all commercially available line types can be connected.

Bus connection

- 9-pin sub-D interface
- Screw terminal connection
- 90° cable outlet

Electrical parameters

- Terminating resistance switchable
- Baud rate: Up to 1,0 MBit/s

Ambient conditions

- Operating temperature: 0 °C to +60 °C
- Transport / storage temperature: -25 °C to +75 °C
- Relative humidity: max. 75 % at a temperature of +25 °C
- Industrial protection: IP20

Design

- Dimensions (H x W x B): 17 x 40 x 65 mm
- Interface: 9-pin sub-D
- Weight: Approx. 40 g
- Casing: Plastic material metallized

Pinb assignment

- A1 = CAN_L = Pin 2 Sub-D
- B1 = CAN_H = Pin 7 Sub-D
- C1 = CAN GND = Pin 3 Sub-D
- GND = V- = Pin 6 Sub-D
- CAN V+ = V+ = Pin 9 Sub-D

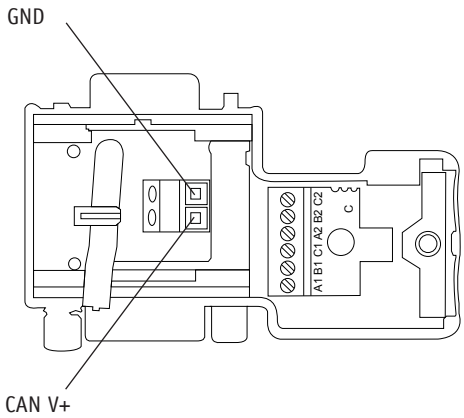

CE mark

Plugs are passive components and are not subject to the CE mark system pursuant to EU Directives.

Ordering details	Art. No.
Connector PG/90° screw terminal	119030000

Connector PG/90° screw terminal

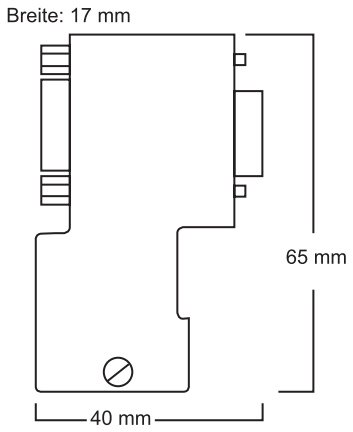

Engineering drawing

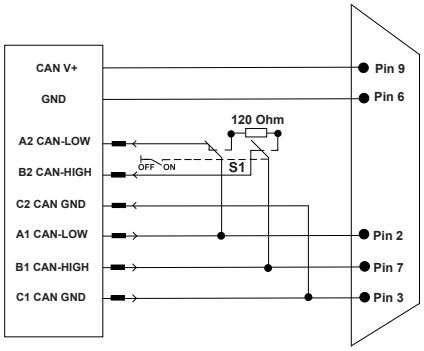

Functional diagram

Connector screw terminal axial

Function

This connector screw terminal axial allows for a quick and comfortable connection of incoming and outgoing bus lines. The connector contacts are routed on colour-labeled screw-type terminals. In position ON, the integrated terminating resistor switches off the outgoing segment. When using the screw terminal all commercially available line types can be connected.

Bus connection

- 9-pin sub-D interface
- Screw terminal connection
- Axial cable outlet

Electrical parameters

- Terminating resistor integrated, selectable from outside by switch
- Baud rate: up to 1.0 Mbp

Ambient conditions

- Operating temperature: 0 °C to +60 °C
- Transport / storage temperature: -25 °C to +75 °C
- Relative humidity: max. 75 % at a temperature of +25 °C
- Industrial protection: IP20

Design

- Dimensions (H x W x D): 67,5 x 40 x 17 mm
- Interface: 9-pin sub-D
- Weight: approx. 40 g
- Casing: plastic material metallized

Pin assignment

- A1 = CAN Low = Pin 2 sub-D
- B1 = CAN High = Pin 7 sub-D
- C1 = CAN GND = Pin 3 sub-D

CE mark

Plugs are passive components and are not subject to the CE mark system pursuant to EU Directives.

Connector screw terminal axial

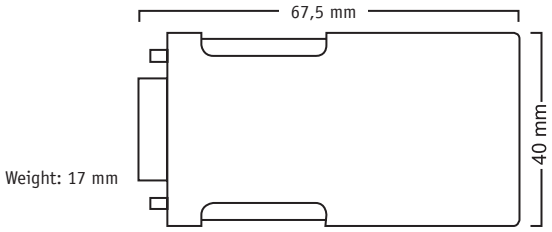

Engineering drawing

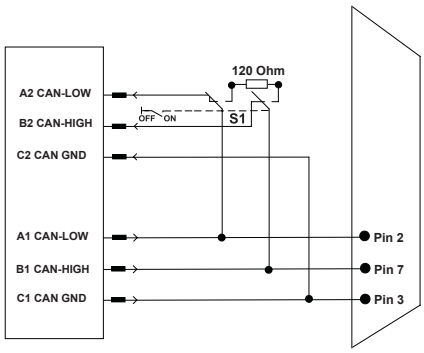

Functional diagram

Ordering details	Art. No.
Connector screw terminal axial	119030001

Connector 90° screw terminal with and without PG

Function

The **connector PG/90° screw terminal** allows a quick and comfortable connection of incoming and continuing bus lines. The plug contacts are highlighted in colours on screw terminals.
The terminating resistor is integrated and disconnects the outgoing segment in ON position. When using the screw terminal all commercially available line types can be connected.

Bus connection

- 9-pin sub-D interface
- Screw terminal connection
- 90° cable outlet

Electrical parameters

- Terminating resistor integrated, selectable from outside by switch
- Baud rate: up to 1.0 Mbps

Ambient conditions

- Operating temperature: -20 °C to +70 °C
- Industrial protection: IP20

Design

- Dimensions (H x W x D): 17 x 46 x 77 mm
- Interface: 9-pin sub-D
- Weight: approx. 40 g
- Casing: thermoplastic

Pin assignment

Pin	Bezeichnung	Adernfarbe
1	V+	gelb
2	CAN-LOW	braun
3	CAN-GND	weiß
4	V-	grau
5	CAN-SHLD	
6	V-	grau
7	CAN-HIGH	grün
8		
9	V+	gelb

CE mark

Plugs are passive components and are not subject to the CE mark system pursuant to EU Directives.

Ordering details	Art. No.
Connector 90° screw terminal with PG	119030010
Connector 90° screw terminal without PG	119030011

Connector PG/90° screw terminal

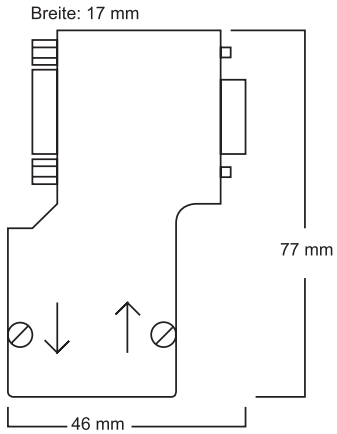

Engineering drawing

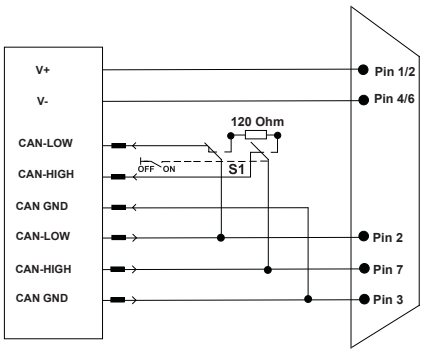

Functional diagram

Connector PG/90° Fast Connect

Function

The connector PG/90° Fast Connect allows a quick and comfortable connection of incoming and continuing bus lines.
The contacts are highlighted in colours on labelled contact clamps. The terminating resistor is integrated and disconnects the outgoing segment in ON position.
The easy-to-install connection through an insulation piercing terminal requires a Fast Connect type of line construction.

Bus connection

- 9-pin sub-D interface
- Insulation piercing terminal
- 90° cable outlet

Electrical parameters

- Terminating resistor integrated, selectable from outside by switch
- Baud rate: up to 1.0 Mbps

Ambient conditions

- Operating temperature: -25 °C to +70 °C
- Industrial protection: IP20

Design

- Dimensions (H x W x D): 47 x 80 x 16 mm
- Interface: 9-pin sub-D
- Weight: approx. 40 g
- Casing: thermoplastic

Pin assignment

Pin	Description	Conductor color
1		
2	CAN-LOW	brown
3	CAN-GND	white
4		
5	CAN-SHLD	
6		
7	CAN-HIGH	green
8		
9		

CE mark

Plugs are passive components and are not subject to the CE mark system pursuant to EU Directives.

Ordering details	Art. No.
Connector PG/90° Fast Connect	119030007

Connector PG/90° Fast Connect

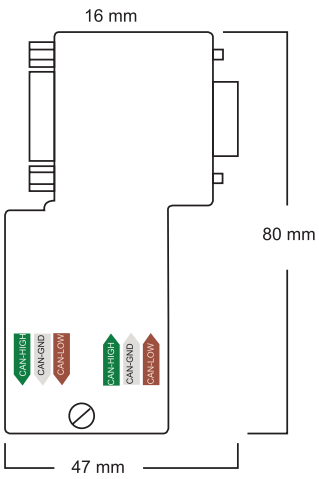

Engineering drawing

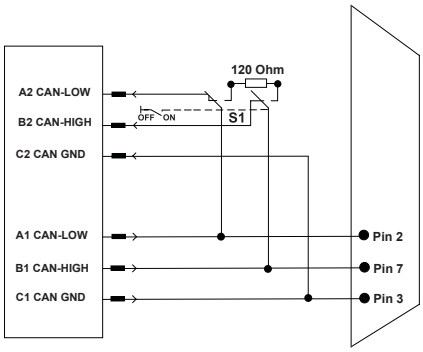

Functional diagram

CANbridge

Function

The **CANbridge X2** makes it possible to connect two CAN networks of the same type or of different types. It can be used as a message repeater to expand network distances as well as to connect different CAN networks together (regardless of protocol and speed). With the CANbridge X2, the CAN networks are physically decoupled (electrical isolation) and the bus load is reduced on both CAN networks. The integrated diagnostics by LED is used for the easy troubleshooting of the respective channel.
For more complex applications, the supplied CANbridge X2 parameterization software can be used to flexibly adjust the filtering and forwarding of CAN telegrams.

Technical data

• Dimensions (D x W x H):	74 x 75 x 31 mm
• Weight:	Approx. 130 g
• Power supply:	18 - 30 V DC
• Current draw:	Typ. 35 mA | Max. 60 mA
• Ambient temperature:	-25 °C to +60 °C
• Storage temperature:	-25 °C to +75 °C
• Transmission rate:	10 kbit/s to 1 Mbit/s
• Protocol:	CAN 2.0A (11 Bit) CAN 2.0B (29 Bit) CANopen® SAEJ1939 DeviceNet
• Connection:	2 x connector, SUB-D, 9-pin Mini USB socket (type 1.1)

Cable length

The maximum cable length mainly depends on the baud rate used. The stated cable lengths are for reference only. In addition, the maximum cable length depends on the number of devices connected, and on the cable type.

Bit rate	Bus length
1 Mbit/s	30 m
800 kbit/s	50 m
500 kbit/s	100 m
250 kbit/s	250 m
125 kbit/s	500 m
20 kbit/s	2500 m

Rotary switch

The two ten-position rotary switches on the front panel are used to set the CAN baud rate.

Switch position	0	1	2	3	4	5	6	7	8	9
Baud rate	Auto	-	20 k	50 k	100 k	125 k	250 k	500 k	800 k	1 M

LED

The front LEDs provide information on the operating state.

PWR	RX	TX	Description
•	x	x	Power supply of assembly is ok and operating system is running
☼	x	x	Assembly is not parameterised
•	☼	x	Incoming communication is correct
•	☼	x	Incoming communication is faulty
•	X	☼	Outgoing communication is correct
•	X	☼	Outgoing communication is faulty

an: • aus: ○ blinkend: ☼ nicht relevant: x

CANbridge X2

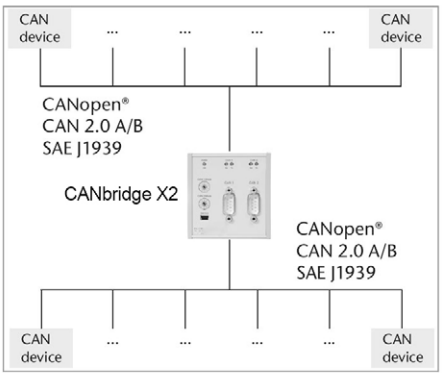

Example of application

Ordering details	Art. No.
CANbridge X2	119040005

CAN bus line

Function

The two-pair **CAN bus line** is used to cable CAN bus systems in accordance with ISO 11898 with UL- and CSA approval and bus systems of 120 Ohm nominal impedance. The power supply of the bus logic can be rendered via the second pair in the cable.
The transmission properties of the lines are CAN system-conforming and ensure a high data transmission security.
The line is suitable for permanent and partly flexible installation in dry and wet rooms.

Electrical parameters

- Surge impedance: 120 Ohm
- Conductor resistance (loop): max. 115 Ohm/km
- Insulation resistance: min. 5 GOhm x km
- Coupling resistance (up to 30 MHz): max. 250 MOhm/m
- Effective capacitance (at 800Hz): max. 40 nF/km
- Working voltage peak: 250 V
- Test voltage: core/core: 1,500 V
  core/shield: 1,000 V

Design

- Conductor: Copper wire bright 0.34 mm², 7-wire
- Insulating covering: cellular-PE or foam skin, core diameter: approx. 1.7 mm
- Core arrangement: 2 cores laid up as pair, 2 pairs laid up with two fillers for cable core assembly
  Pair 1: white and brown
  Pair 2: green and yellow
- Shield: braid made of tinned copper wires
- Sheath: PVC
  Outside diameter: 8,5 mm
- Colour: violet (RAL 4001)

Mechanical and technical properties

- Min. bending radius: laid: 8 x Line diameter
- Temperature range: laid: -30°C to +80°C
  moved: -5°C to +70°C
- Burning behaviour: flame retardant based on VDE 0482, Part 265-2-1 / IEC 60332-1-2

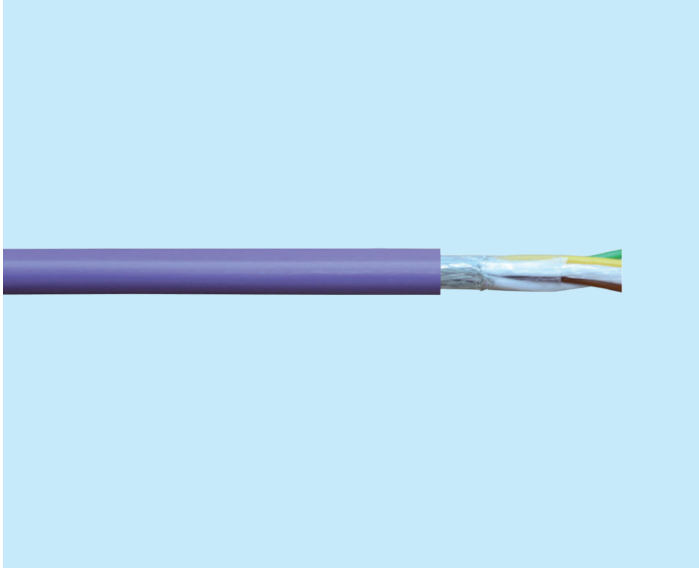

CAN bus line

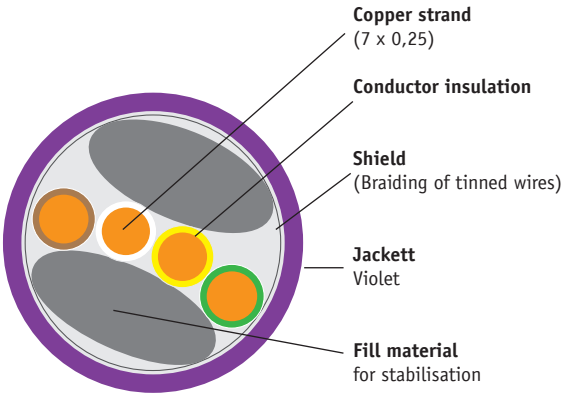

Engineering drawing

Ordering details	Art. No.
CAN bus line	119050000

Notes:

This catalog replaces all previous catalog.

Figures, drawings, weights, sizes, performance parameters or other figures are only binding if expressly agreed upon. Indu-Sol reserves the right to make changes.

The customer shall be responsible for the intended use of the or-dered components. The information contained in the catalog was prepared with utmost care. As regards correctness, completeness and up-to-dateness of the same liability shall be limited to coarse neg-ligence.

Catalog No. 06
Updated 01/2018 (All rights reserved))

Indu-Sol GmbH
Blumenstrasse 3
04626 Schmoelln

Telephone: +49 (0) 34491 5818-0
Telefax: +49 (0) 34491 5818-99

info@indu-sol.com
www.indu-sol.com

We are certified according to DIN EN ISO 9001:2008

InduSol America, LLC
980 Birmingham Rd. Ste 824
Alpharetta, GA 30004, USA

Telephone: +1.678.880.6910

hello@indusolamerica.com
www.indusolamerica.com